Multi Control Devices | Switch Type

8-directional Stick Switch (with Center-push Function)

RKJXM Series

Automotive-compatible multifunctional switch with an 11×11mm round body, offering 1-axis 8-direction operation with tactile feedback.

Automotive

- Directional resolution:8-direction
- Ratings (max.) (Resistive load):10mA 5V DC
- Operating temperature range:-40℃ to +85℃

Applications:Audio_TV:Visual
Automotive:Navigation/audio systems, HVAC

Product List

Products No.	Operating angle (Directions)	Travel (Center push) (mm)	Dimensions (W×D×H) (mm)	Automotive	Drawing No.
RKJXM1015004	A, B, C, D direction: 10°max. AB, BC, CD, DA direction: 12°max.	0.3±0.2	11.0×11.0×6.6	●	1

⚠Note

1. This catalog shows only outline specifications. When using the products, please obtain formal specifications for supply.
2. Please place purchase orders per minimum order unit (integer).

Packing Specifications

Tray

Number of packages(pcs.)		Export package measurements (mm)
1 case / Japan	1 case / export packing	
1,000	2,000	405×290×200

Drawing No.1

Dimensions

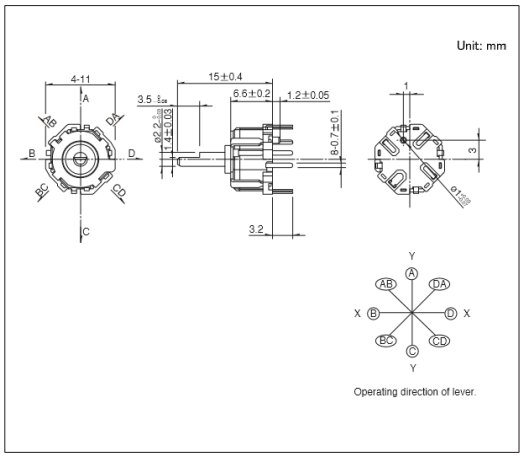

Mounting Hole Dimensions

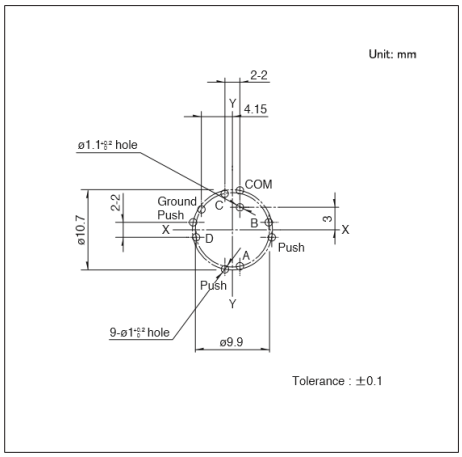

Viewed from mounting side.
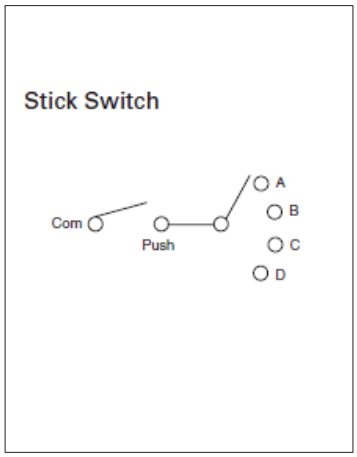
Circuit Diagram