Switches

Detector Switches

List of Varieties

Series		SPVS	SPVN	SPVT	SPVM	SPVR	SPVE	SSCQ
Photo							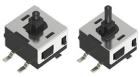	
Features/Type		Horizontal Compact	Horizontal Low-profile	Horizontal	Vertical Compact	Vertical Low-profile lever type	Vertical Compact push operation type	Horizontal Compact
Operation type		Two-way operation type					One-way operation type	Two-way output, two-step detection type
Water-proof		—	—	—	—	—	—	—
Dust-proof		—	—	—	—	—	—	—
IP standard		—	—	—	—	—	—	—
Dimensions (mm)		3.3×3.5×1.0	3.6×3.8×1.0	4.7×5.6×1.9	2.8×3.5×1.5	3.6×4.2×1.2	3.4×3.0×2.3 3.4×4.0×1.8	3.8×3.6×0.9
Poles		1						
Positions		1						Two-direction, 2-positions each side
Operating force		0.35N max.		0.4N max.		0.35N max.	0.3N max.	0.35N max.
Operating temperature range		-40℃ to +85℃					-10℃ to +60℃	
Rating(max.)/(min.) (Resistive load)		1mA 5V DC/50μA 3V DC		50mA 20V DC/ 100μA 3V DC	1mA 5V DC/ 50μA 3V DC	1mA 5V DC/ 100μA 3V DC	0.1A 30V DC/ 50μA 3V DC	1mA 5V DC/ 50μA 3V DC
Electrical performance	Contact resistance (Initial/After operating life)	2Ω max./5Ω max.		500mΩ max./ 1Ω max.	2Ω max./ 5Ω max.	3Ω max./ 5Ω max.	500mΩ max./ 1Ω max.	2Ω max./ 5Ω max.
	Insulation resistance	100MΩ min. 100V DC						
	Voltage proof	100V AC for 1 minute						
Mechanical performance	Terminal strength	0.5N for 1 minute			1N for 1 minute	0.5N for 1 minute		
	Actuator strength	5N		10N	5N	2N	5N	1N
Durability	Operating life without load	50,000 cycles 5Ω max.		100,000 cycles 1Ω max.	50,000 cycles 5Ω max.		50,000 cycles 1Ω max.	50,000 cycles 5Ω max.
	Operating life with load Rating(max.) (Resistive load)	50,000 cycles 5Ω max.		100,000 cycles 1Ω max.	50,000 cycles 5Ω max.		50,000 cycles 1Ω max.	50,000 cycles 5Ω max.
Environmental performance	Cold	-40℃ 96h					-20℃ 96h	
	Dry heat	85℃ 96h						
	Damp heat	40℃, 90 to 95%RH 96h						
Automotive		●	●	●	●	●	—	—

⚠Note

● Indicates applicability to all products in the series, while ○ indicates applicability to some products in the series.

Detector Switches

Series		SSCM	SPVL	SPPB	SSCT	SSCF	SSCW	SSCL
Photo								
Features/Type		Horizontal Compact	Horizontal Low-profile	General-purpose type	Micro switch type	Two-way output type	With female connector terminal	
Operation type		Two-way output type	Multi-direction operation type	One-way output type Two-way output type	Two-way output type			
Water-proof		—	—	—	—	—	—	—
Dust-proof		—	—	—	—	—	—	—
IP standard		—	—	—	—	—	—	—
Dimensions (mm)		4.0×5.0×1.5	6.6×5.55×1.0	6.3×3.0×4.9 6.3×5.1×3.7 6.3×6.1×4.25 6.4×3.0×4.9 6.5×3.1×4.9 8.8×3.5×5.1 9.15×3.75×5.5 9.7×3.75×5.1 9.75×3.75×5.7 10.0×6.1×5.25	12.5×5.0×11.5	11.0×5.8×12.4 15.5×5.8×12.4	5.3×13.1×11.35	5.3×11.0×16.1
Poles		1						
Positions		2	1		2		1	2
Operating force		0.35N max.			0.7±0.3N	0.7N max.	1N max.	0.7N max.
Operating temperature range		-10℃ to +60℃	-40℃ to +85℃					
Rating(max.)/(min.) (Resistive load)		1mA 5V DC/50μA 3V DC		0.1A 30V DC/ 50μA 3V DC	0.1A 12V DC/50μA 3V DC		0.1A 12V DC/ 100μA 3V DC	0.1A 12V DC/ 50μA 5V DC
Electrical performance	Contact resistance (Initial/After operating life)	2Ω max./5Ω max.		1Ω max./ 2Ω max.	200mΩ max./ 500mΩ max.	100mΩ max./ 300mΩ max.	500mΩ max./1Ω max.	
	Insulation resistance	100MΩ min. 100V DC			100MΩ min. 250V DC	100MΩ min. 100V DC	100MΩ min. 250V DC	100MΩ min. 100V DC
	Voltage proof	100V AC for 1 minute			250V AC for 1 minute	100V AC for 1 minute	250V AC for 1 minute	100V AC for 1 minute
Mechanical performance	Terminal strength	0.5N for 1 minute	1N for 1 minute	3N for 1 minute		5N for 1 minute	—	
	Actuator strength	2N	5N	10N	20N	10N	20N	10N
Durability	Operating life without load	50,000 cycles 5Ω max.		50,000 cycles 2Ω max.	10,000 cycles 500mΩ max.	50,000 cycles 300mΩ max.	100,000 cycles 1Ω max.	50,000 cycles 1Ω max.
	Operating life with load Rating(max.) (Resistive load)	50,000 cycles 5Ω max.		50,000 cycles 2Ω max.	10,000 cycles 500mΩ max.	50,000 cycles 300mΩ max.	100,000 cycles 1Ω max.	50,000 cycles 1Ω max.
Environmental performance	Cold	-20℃ 96h	-40℃ 500h					
	Dry heat	85℃ 96h	85℃ 500h					
	Damp heat	40℃, 90 to 95%RH 96h	60℃, 90 to 95%RH 500h					
Automotive		—	●	●	●	●	●	●

⚠Note

● Indicates applicability to all products in the series, while ○ indicates applicability to some products in the series.

Detector Switches

Series		SSCZ	SPVQ3	SPVQ6	SPVQ7	SPVQ8	SPVQ8H	SPVQ9
Photo								
Features/Type		Connector terminal 1-pole 2-positions type	Water-proof type Long travel type	Compact size & water-proof type With internal resistor type	Water-proof type	Ultra-compact & water-proof type With internal resistor type	Water-proof type	Water-proof type Two-pole fast switching type
Operation type		Two-way output type		One-way output type Two-way output type	Two-way output type			
Water-proof		—	●	●	●	●	●	●
Dust-proof		—	●	●	●	●	●	●
IP standard		—	IP6K7	IP6K7	IP6K7	IP6K7	IP6K7	IP6K7
Dimensions (mm)		13.84×5.4×15.4	5.3×13.0×8.35	5.3×13.3×6.5	5.4×14.7×6.7	5.3×8.3×6.5	6.45×14.8×14.5 6.45×17.95×14.5	8.4×15.4×7.5
Poles		1						2
Positions		2	1 2			1		2
Operating force		1.1N max.	1±0.5N 3N max.		1±0.5N	1±0.5N 3N max.	4.7N max.	1±0.5N
Operating temperature range		-40℃ to +85℃						
Rating(max.)/(min.) (Resistive load)		0.1A 16V DC/ 100μA 3V DC	0.1A 12V DC/ 50μA 5V DC	0.1A 12V DC/ 50μA 5V DC Respond individually	0.1A 12V DC/ 50μA 5V DC	0.1A 16V DC/ 50μA 5V DC Respond individually	0.1A 16V DC/ 50μA 5V DC	50mA 26V DC/ 50μA 5V DC
Electrical performance	Contact resistance (Initial/After operating life)	500mΩ max./1Ω max.		500mΩ max./1Ω max. Respond individually	500mΩ max./ 1Ω max.	500mΩ max./1Ω max. 500mΩ max./3Ω max. Respond individually	500mΩ max./ 1Ω max.	75mΩ max./ 200mΩ max.
	Insulation resistance	100MΩ min. 250V DC	100MΩ min. 500V DC	100MΩ min. 500V DC Respond individually	100MΩ min. 500V DC	100MΩ min. 500V DC Respond individually	100MΩ min. 500V DC	
	Voltage proof	250V AC for 1minute	500V AC for 1 minute	500V AC for 1 minute Respond individually	500V AC for 1 minute	500V AC for 1 minute Respond individually	500V AC for 1 minute	
Mechanical performance	Terminal strength	—	3N for 1 minute				110N for 1 minute	3N for 1 minute
	Actuator strength	20N						
Durability	Operating life without load	300,000 cycles 1Ω max.		300,000 cycles 300,000 cycles 1Ω max.	300,000 cycles 1Ω max.	300,000 cycles 300,000 cycles 1Ω max. 1,000,000 cycles 3Ω max.	100,000cycles 1Ω max.	300,000 cycles 200mΩ max.
	Operating life with load Rating(max.) (Resistive load)	300,000 cycles 1Ω max.		300,000 cycles 1Ω max. Respond individually	300,000 cycles 1Ω max.	300,000 cycles 1Ω max. 1,000,000 cycles 3Ω max. Respond individually	100,000cycles 1Ω max.	300,000 cycles 200mΩ max.
Environmental performance	Cold	-40℃ 500h						
	Dry heat	85℃ 500h						
	Damp heat	60℃, 90 to 95%RH 500h						
Automotive		●	●	●	●	●	●	●

⚠Note

● Indicates applicability to all products in the series, while ○ indicates applicability to some products in the series.

Detector Switches

Series		SPVQA	SPVQC	SPVQF	SSCN	SDDH
Photo						
Features/Type		Water-proof type (Fork terminals)	Water-proof type Two-pole fast switching type (surface mount)		Water-proof type	
Operation type		Two-way output type				Push
Water-proof		●	●	●	●	●
Dust-proof		●	●	●	●	●
IP standard		IP6K7	IP6K7	IP6K7	IP6K7	IP6K8
Dimensions (mm)		6.4×15.2×7.95	7.4×15.4×7.5	6.3×8.5×7.0	5.0×13.0×15.0	28.5×9.0×24.3
Poles		1	2		1	
Positions		1 2	2			1
Operating force		1±0.5N		1.8N max.	2N max.	4.6N max.
Operating temperature range		-40℃ to +85℃		-40℃ to +90℃	-40℃ to +85℃	-15℃ to +80℃
Rating(max.)/(min.) (Resistive load)		0.1A 12V DC/ 50μA 5V DC	50mA 18V DC/50μA 5V DC		0.1A 12V DC/ 100μA 5V DC	4.5A 12V DC/ 10mA 12V DC
Electrical performance	Contact resistance (Initial/After operating life)	500mΩ max./ 1Ω max.	75mΩ max./ 200mΩ max.	75mΩ max./ 2Ω max.	500mΩ max./1Ω max.	
	Insulation resistance	100MΩ min. 500V DC	100MΩ min. 250V DC		100MΩ min. 500V DC	10MΩ min. 500V DC
	Voltage proof	500V AC for 1 minute	250V AC for 1 minute		500V AC for 1 minute	
Mechanical performance	Terminal strength	3N for 1 minute		5±1N for 10±1S	3N for 1 minute	Slider pull-out strength: 100N min
	Actuator strength	20N			10N	—
Durability	Operating life without load	300,000 cycles 1Ω max.	300,000 cycles 200mΩ max.	300,000 cycles 2Ω max.	100,000 cycles 1Ω max.	
	Operating life with load Rating(max.) (Resistive load)	300,000 cycles 1Ω max.	300,000 cycles 200mΩ max.	300,000 cycles 2Ω max.	100,000 cycles 1Ω max.	
Environmental performance	Cold	-40℃ 500h				-15℃ 96h
	Dry heat	85℃ 500h		90℃ 500h	85℃ 500h	80℃ 96h
	Damp heat	60℃, 90 to 95%RH 500h				40℃, 90 to 95%RH 96h
Automotive		●	●	●	●	●

⚠Note

● Indicates applicability to all products in the series, while ○ indicates applicability to some products in the series.

Compact Two-way Operation
SPVS Series

Compact, thin-profile type with a body height of 1.0mm, 3.3×3.5mm, offering N/O & N/C two-circuit varieties.

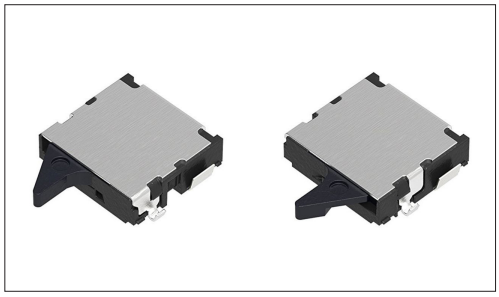

Automotive

- Rating(max.)/(min.)(Resistive load):1mA 5V DC/50μA 3V DC
- Contact resistance(Initial/After operating life):2Ω max./5Ω max.
- Operating life without load:50,000 cycles
- Operating life with load Rating(max.)(Resistive load):
  50,000 cycles 5Ω max.

Applications:Mobile:Smartphones, tablets,Headsets, wearables, Notebooks, peripherals
Energy_Industrial:Robots, drones,Industrial equipment, Converters
Game:Home handheld consoles,Virtual/augmented reality
Healthcare:Healthcare equipment,Nursing care equipment,Analysis, test equipment
Audio_TV:Visual,Audio,Cameras
Automotive:Navigation/audio systems, HVAC

■ Product List

Products No.	Poles	Positions	Operating force	Terminal type	Lever length	Operating direction	Circuit	Location lug	Dimensions (W×D×H) (mm)	Water-proof	Dust-proof	Automotive	Drawing No.
SPVS310100	1	1	0.35N max.	For PC board (Reflow)	Standard	Right	N/O	With	3.3×3.5×1.0	—	—	●	1
SPVS310200	1	1	0.35N max.	For PC board (Reflow)	Standard	Right	N/O	Without	3.3×3.5×1.0	—	—	●	2
SPVS320100	1	1	0.35N max.	For PC board (Reflow)	Standard	Right	N/C	With	3.3×3.5×1.0	—	—	●	3
SPVS320200	1	1	0.35N max.	For PC board (Reflow)	Standard	Right	N/C	Without	3.3×3.5×1.0	—	—	●	4
SPVS410100	1	1	0.35N max.	For PC board (Reflow)	Standard	Left	N/O	With	3.3×3.5×1.0	—	—	●	5
SPVS410200	1	1	0.35N max.	For PC board (Reflow)	Standard	Left	N/O	Without	3.3×3.5×1.0	—	—	●	6
SPVS420100	1	1	0.35N max.	For PC board (Reflow)	Standard	Left	N/C	With	3.3×3.5×1.0	—	—	●	7
SPVS420200	1	1	0.35N max.	For PC board (Reflow)	Standard	Left	N/C	Without	3.3×3.5×1.0	—	—	●	8
SPVS360100	1	1	0.35N max.	For PC board (Reflow)	Long	Right	N/C	With	3.3×3.5×1.0	—	—	●	9
SPVS360200	1	1	0.35N max.	For PC board (Reflow)	Long	Right	N/C	Without	3.3×3.5×1.0	—	—	●	10

⚠Note

1. This catalog shows only outline specifications. When using the products, please obtain formal specifications for supply.
2. Please place purchase orders per minimum order unit (integer).
3. This products can be used in vehicles.
   Although these products are designed to perform over a wide operating temperature range, please ensure that you receive and read the formal delivery specifications before use.
4. For the Terminal Layout, please check our website.

■ Packing Specifications

Taping

Number of packages (pcs.)			Tape width (mm)	Export package measurements (mm)
1 reel	1 case / Japan	1 case / export packing		
5,000	10,000	20,000	16	417 x 409 x 139

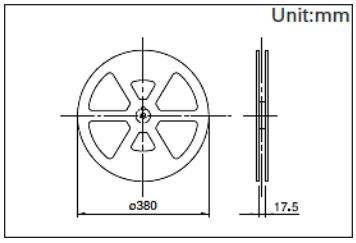

Drawing No.1

■ Dimensions

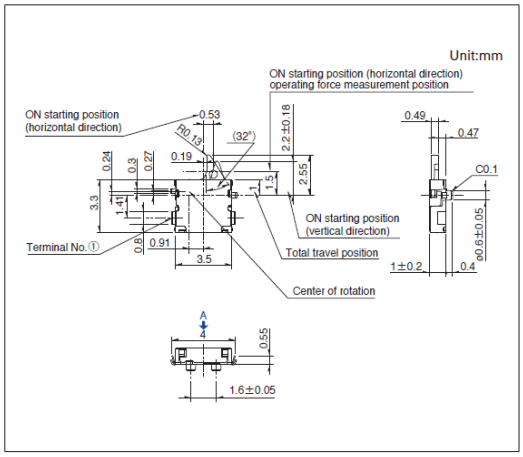

■ Land Dimensions

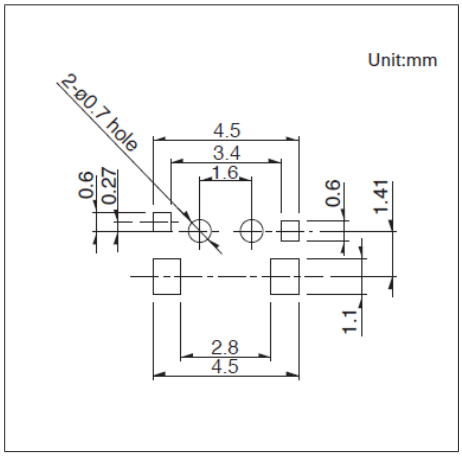

■ Circuit Diagram

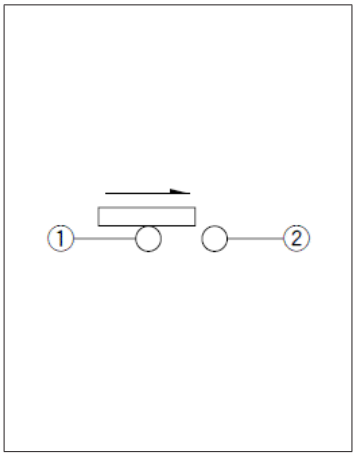

Viewed from direction A in the dimensions.

Drawing No.2

■ Dimensions

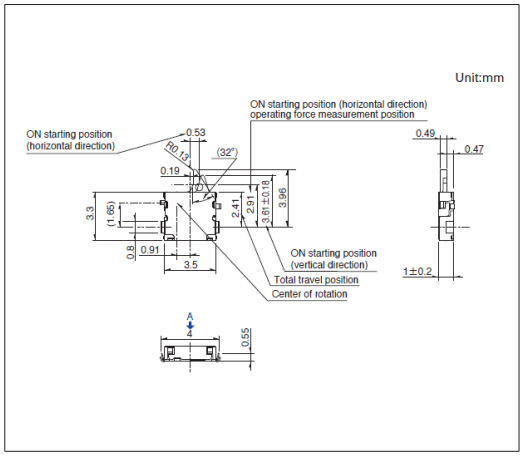

■ Land Dimensions

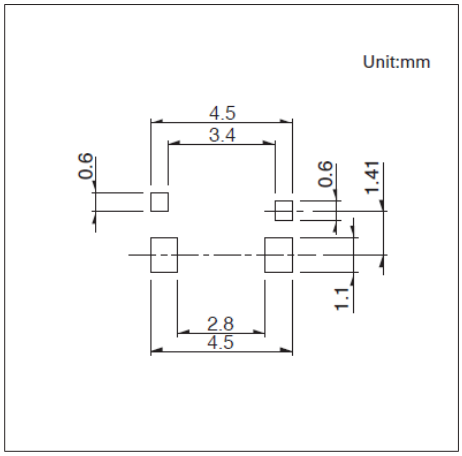

■ Circuit Diagram

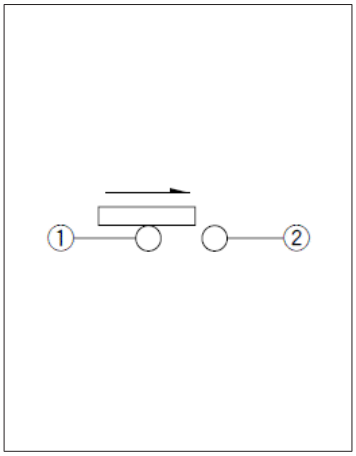

Viewed from direction A in the dimensions.

Drawing No.3

■ Dimensions

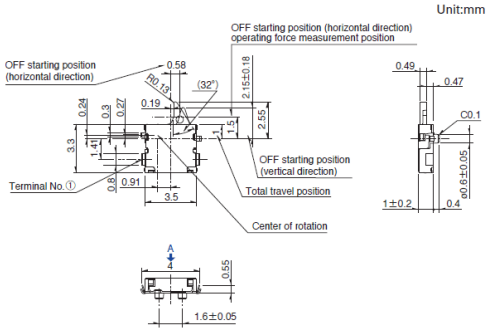

■ Land Dimensions

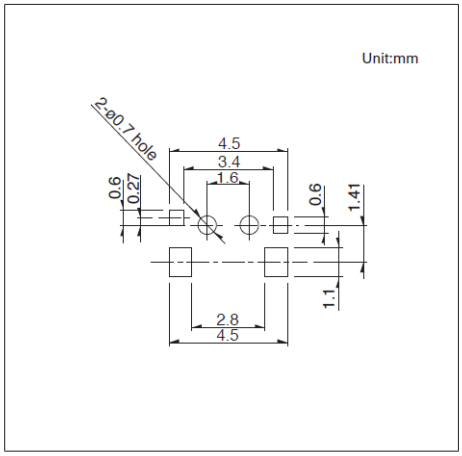

■ Circuit Diagram

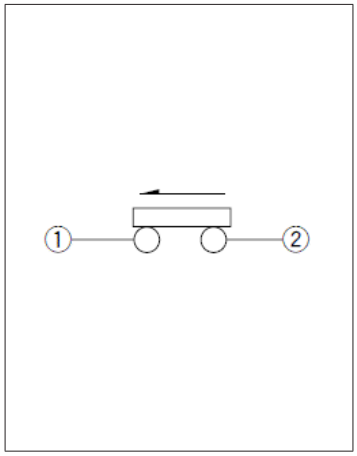

Viewed from direction A in the dimensions.

Drawing No.4

■ Dimensions

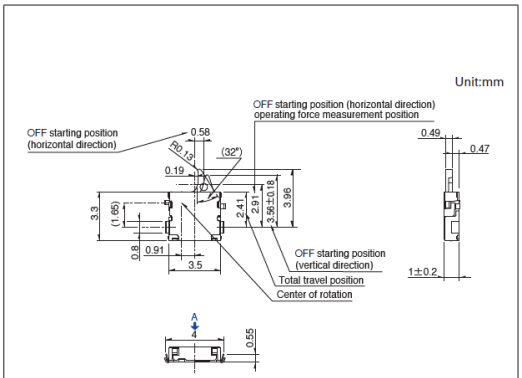

■ Land Dimensions

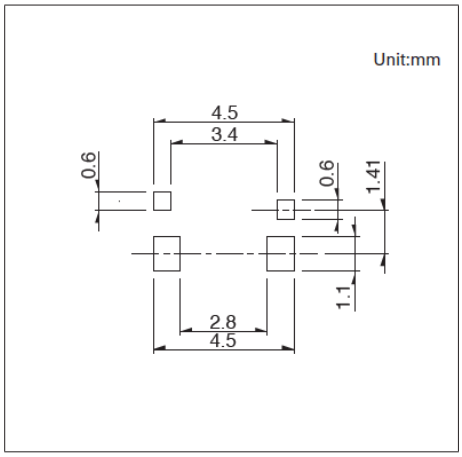

■ Circuit Diagram

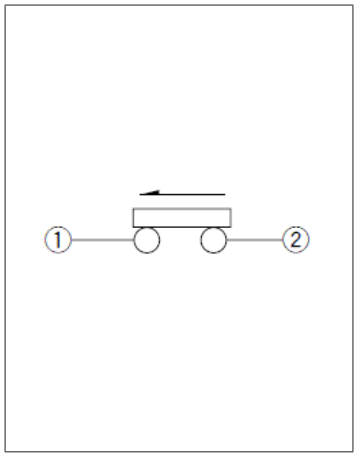

Viewed from direction A in the dimensions.

Drawing No.5

■ Dimensions

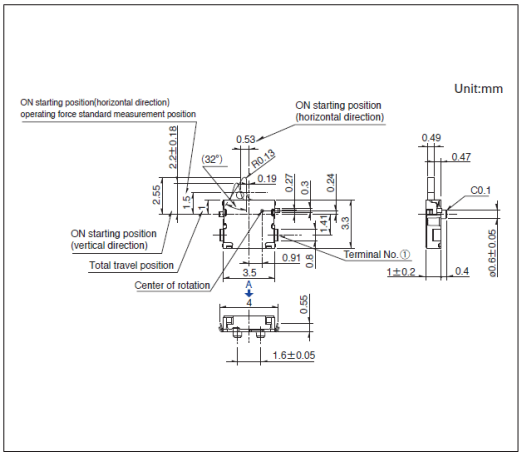

■ Land Dimensions

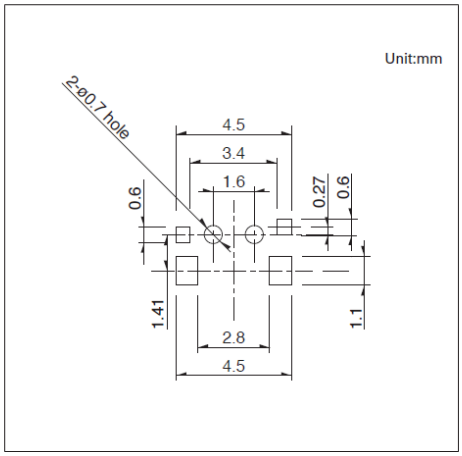

■ Circuit Diagram

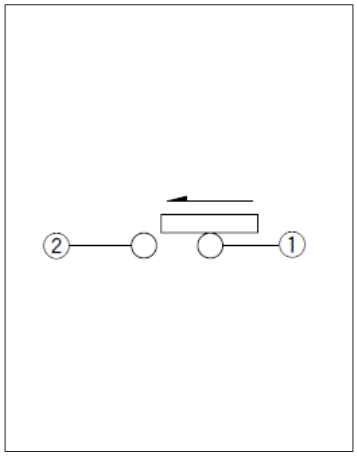

Viewed from direction A in the dimensions.

Drawing No.6

■ Dimensions

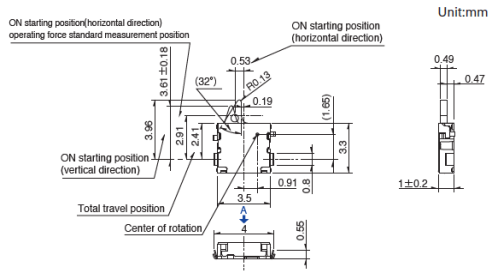

■ Land Dimensions

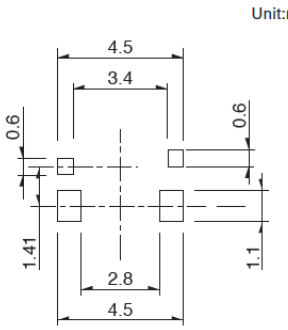

■ Circuit Diagram

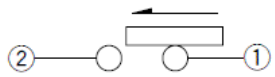

Viewed from direction A in the dimensions.

Drawing No.7

■ Dimensions

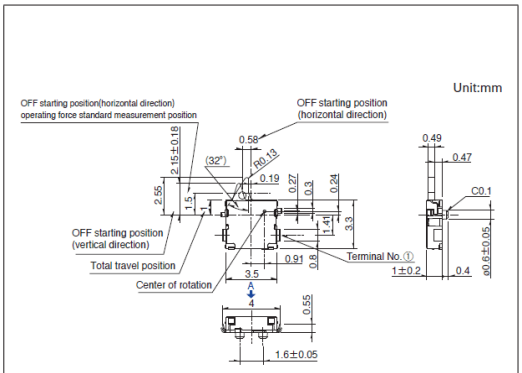

■ Land Dimensions

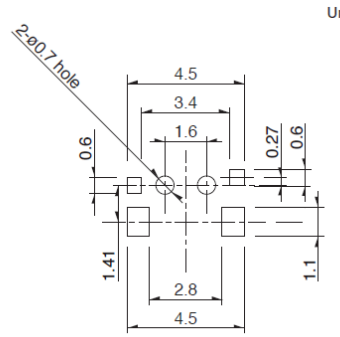

■ Circuit Diagram

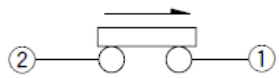

Viewed from direction A in the dimensions.

Drawing No.8

■ Dimensions

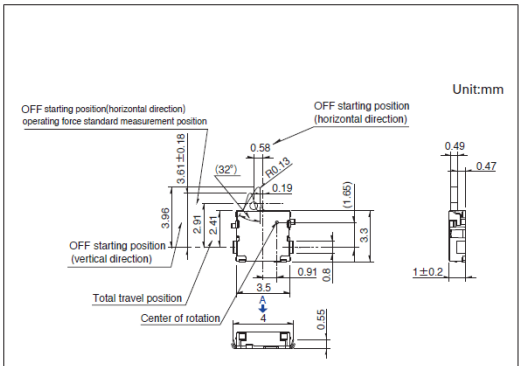

■ Land Dimensions

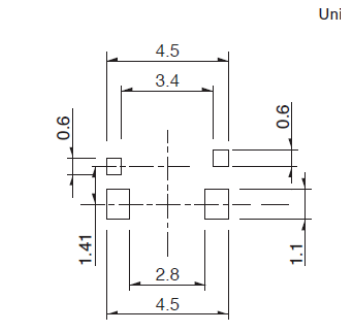

■ Circuit Diagram

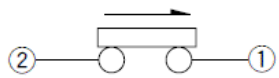

Viewed from direction A in the dimensions.

Drawing No.9

■ Dimensions

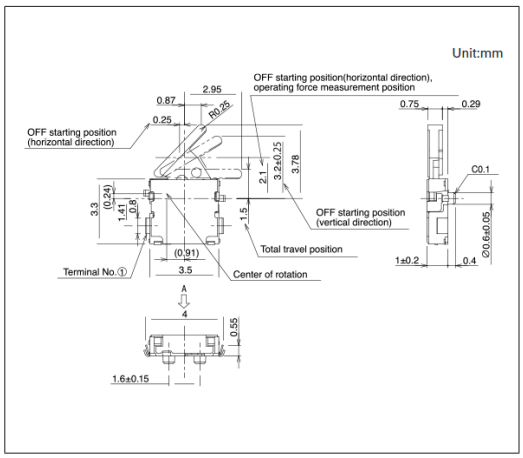

■ Land Dimensions

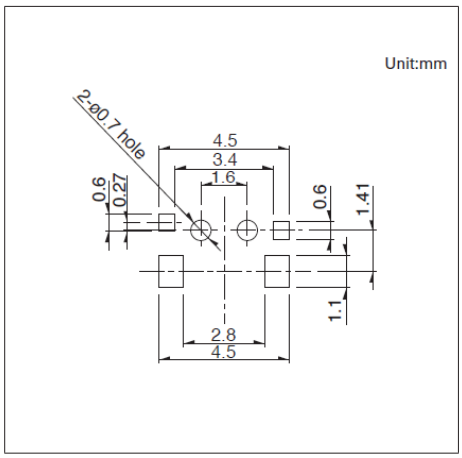

■ Circuit Diagram

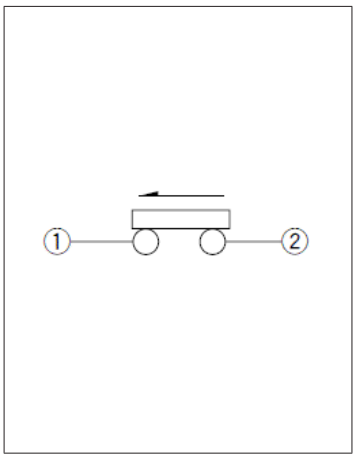

Viewed from direction A in the dimensions.

Drawing No.10

■ Dimensions

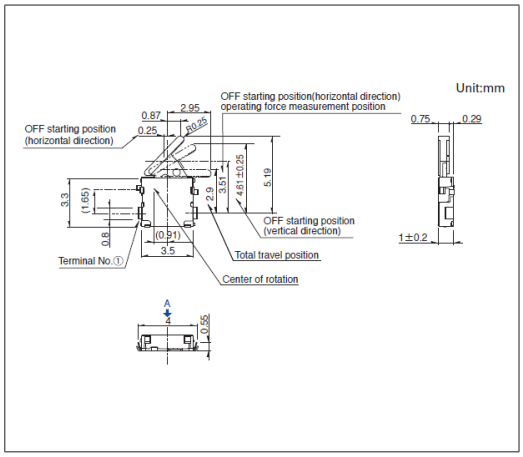

■ Land Dimensions

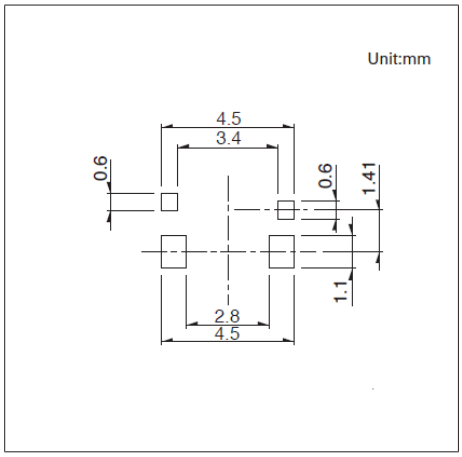

■ Circuit Diagram

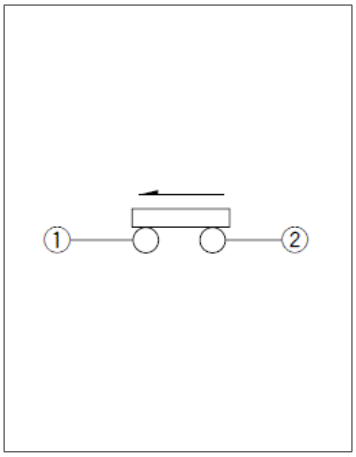

Viewed from direction A in the dimensions.

Low-profile Two-way Operation
SPVN Series

Thin-profile type with a body height of 1.0mm, 3.6×3.8mm.

Automotive

- Rating(max.)/(min.)(Resistive load):1mA 5V DC/50μA 3V DC
- Contact resistance(Initial/After operating life):2Ω max./5Ω max.
- Operating life without load:50,000 cycles
- Operating life with load Rating(max.)(Resistive load):
  50,000 cycles 5Ω max.

Applications:Mobile:Smartphones, tablets,Headsets, wearables, Notebooks, peripherals
Healthcare:Healthcare equipment
Audio_TV:Visual,Audio,Cameras
Automotive:Navigation/audio systems, HVAC

■ Product List

Products No.	Poles	Positions	Operating force	Terminal type	Lever length	Operating direction	Location lug	Dimensions (W×D×H) (mm)	Water-proof	Dust-proof	Automotive	Drawing No.
SPVN110107	1	1	0.35N max.	For PC board (Reflow)	Standard	Right	With	3.6×3.8×1.0	—	—	●	1
SPVN120104	1	1	0.35N max.	For PC board (Reflow)	Standard	Right	Without	3.6×3.8×1.0	—	—	●	2
SPVN210106	1	1	0.35N max.	For PC board (Reflow)	Standard	Left	With	3.6×3.8×1.0	—	—	●	3
SPVN220103	1	1	0.35N max.	For PC board (Reflow)	Standard	Left	Without	3.6×3.8×1.0	—	—	●	4
SPVN310101	1	1	0.35N max.	For PC board (Reflow)	Long	Right	With	3.6×3.8×1.0	—	—	●	5
SPVN320101	1	1	0.35N max.	For PC board (Reflow)	Long	Right	Without	3.6×3.8×1.0	—	—	●	6
SPVN410101	1	1	0.35N max.	For PC board (Reflow)	Long	Left	With	3.6×3.8×1.0	—	—	●	7
SPVN420101	1	1	0.35N max.	For PC board (Reflow)	Long	Left	Without	3.6×3.8×1.0	—	—	●	8

⚠Note

1. This catalog shows only outline specifications. When using the products, please obtain formal specifications for supply.
2. Please place purchase orders per minimum order unit (integer).
3. This products can be used in vehicles.
   Although these products are designed to perform over a wide operating temperature range, please ensure that you receive and read the formal delivery specifications before use.
4. For the Terminal Layout, please check our website.

■ Packing Specifications

Taping

Number of packages(pcs.)			Tape width (mm)	Export package measurements (mm)
1 reel	1 case / Japan	1 case / export packing		
5,000	10,000	20,000	16	417 x 409 x 139

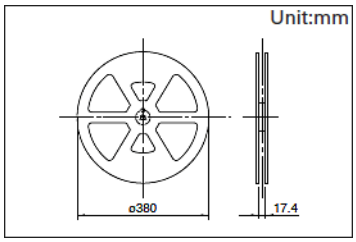

Drawing No.1

■ Dimensions

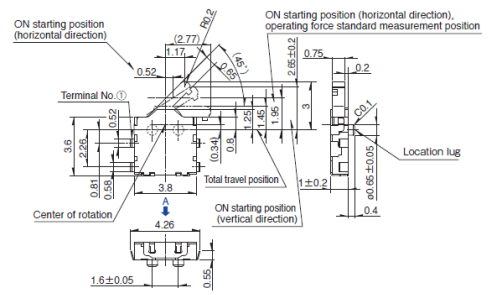

■ Land Dimensions

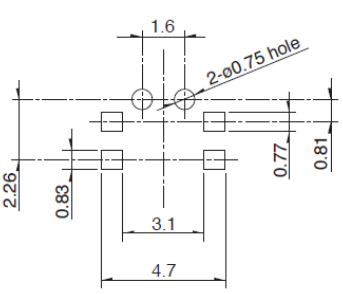

■ Circuit Diagram

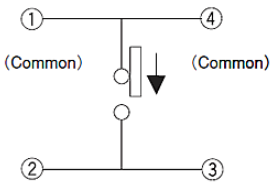

Viewed from direction A in the dimensions.

Drawing No.2

■ Dimensions

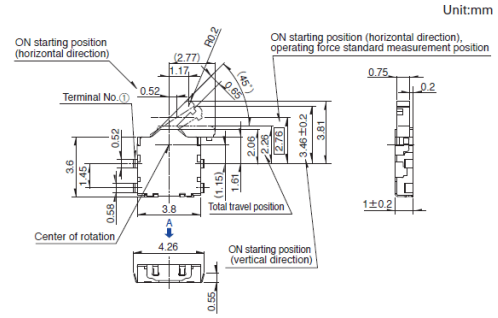

■ Land Dimensions

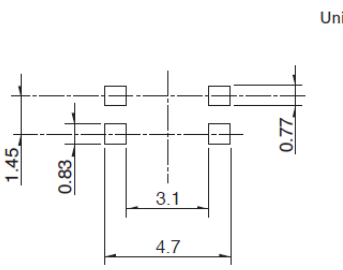

■ Circuit Diagram

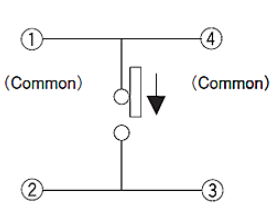

Viewed from direction A in the dimensions.

Drawing No.3

■ Dimensions

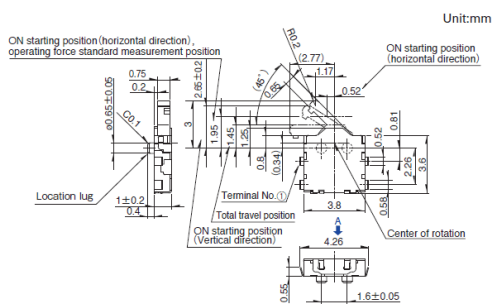

■ Land Dimensions

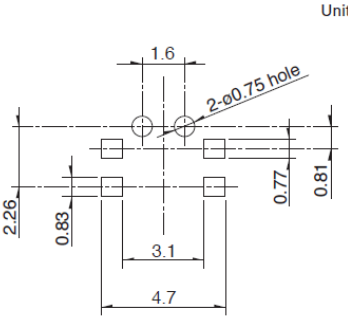

■ Circuit Diagram

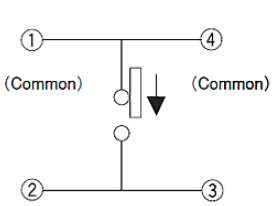

Viewed from direction A in the dimensions.

Drawing No.4

■ Dimensions

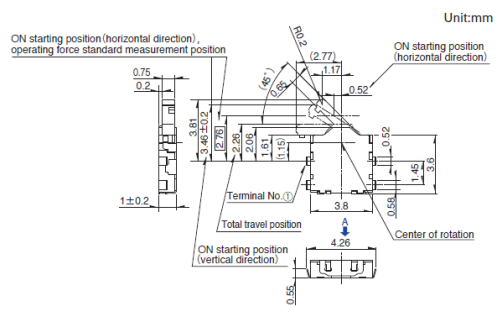

■ Land Dimensions

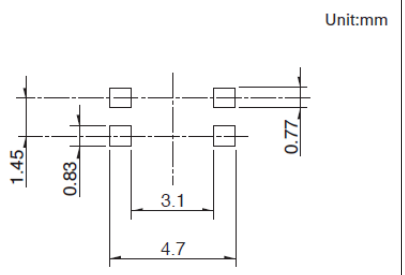

■ Circuit Diagram

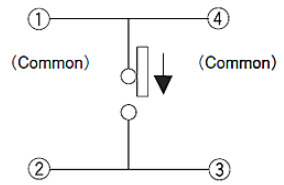

Viewed from direction A in the dimensions.

Drawing No.5

■ Dimensions

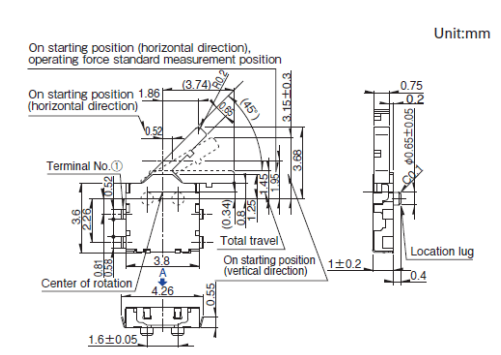

■ Land Dimensions

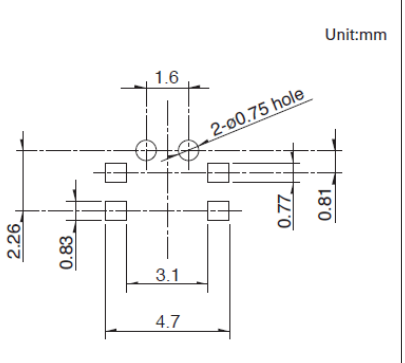

■ Circuit Diagram

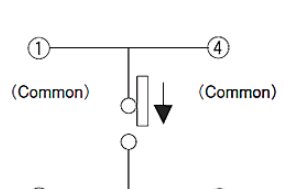

Viewed from direction A in the dimensions.

Drawing No.6

■ Dimensions

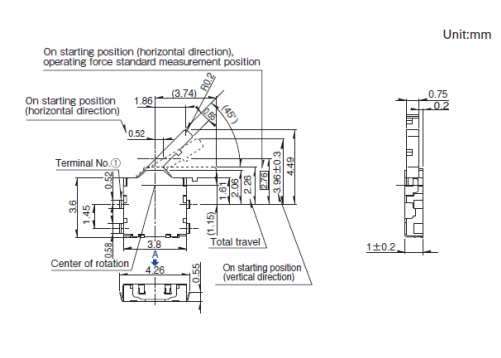

■ Land Dimensions

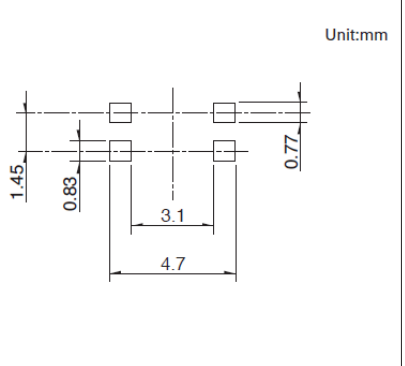

■ Circuit Diagram

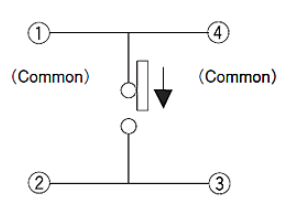

Viewed from direction A in the dimensions.

Drawing No.7

■ Dimensions

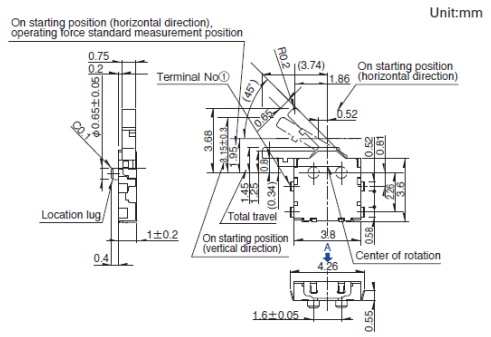

■ Land Dimensions

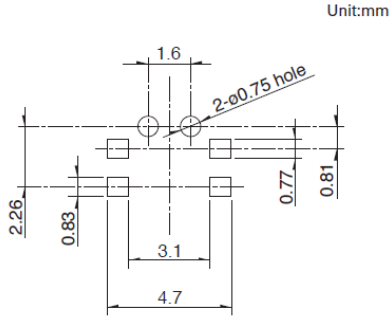

■ Circuit Diagram

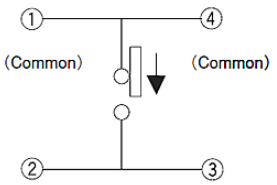

Viewed from direction A in the dimensions.

Drawing No.8

■ Dimensions

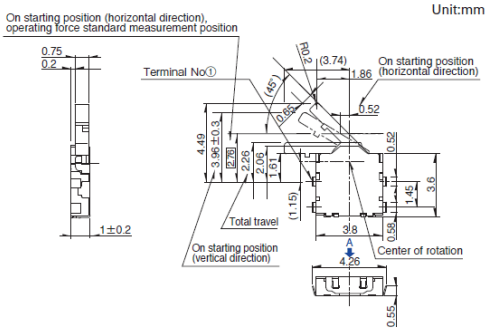

■ Land Dimensions

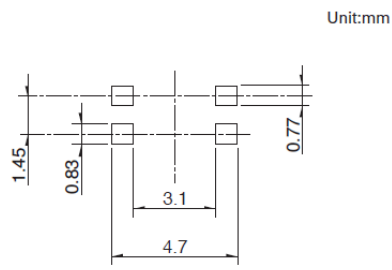

■ Circuit Diagram

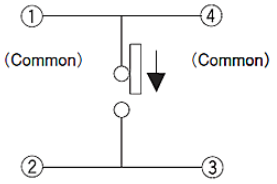

Viewed from direction A in the dimensions.

Two-way Operation
SPVT Series

Compact type with a body height of 1.9mm, 4.7×5.6mm, capable of two-direction detection.

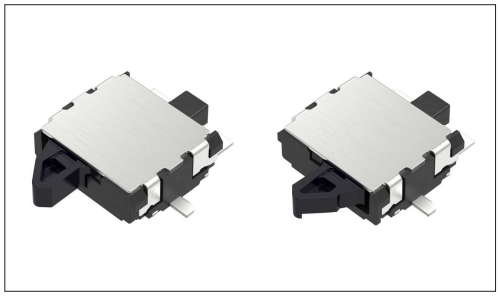

Automotive

- Rating(max.)/(min.)(Resistive load):50mA 20V DC/100μA 3V DC
- Contact resistance(Initial/After operating life):500mΩ max./1Ω max.
- Operating life without load:100,000 cycles
- Operating life with load Rating(max.)(Resistive load):
  100,000 cycles 1Ω max.

Applications:Mobile:Smartphones, tablets,Notebooks, peripherals
Energy_Industrial:Robots, drones,Industrial equipment, Converters
Game:Home handheld consoles,Virtual/augmented reality
Healthcare:Healthcare equipment,Nursing care equipment, Analysis, test equipment
Infrastructure:Smart meters,Power distribution facilities, Data servers,Communications cables
Home:Major home appliances,Distribution boards, Storage batteries,Office equipment
Audio_TV:Visual,Audio,Pro audio,Cameras
Automotive:Navigation/audio systems, HVAC

■ Product List

Products No.	Poles	Positions	Operating force	Terminal type	Operating direction	Location lug	Dimensions (W×D×H) (mm)	Water-proof	Dust-proof	Automotive	Drawing No.
SPVT110106	1	1	0.4N max.	For PC board (Reflow)	Right	With	4.7×5.6×1.9	—	—	●	1
SPVT130102	1	1	0.4N max.	For PC board (Reflow)	Right	With	4.7×5.6×1.9	—	—	●	2
SPVT120103	1	1	0.4N max.	For PC board (Reflow)	Right	With	4.7×5.6×1.9	—	—	●	3
SPVT140104	1	1	0.4N max.	For PC board (Reflow)	Right	With	4.7×5.6×1.9	—	—	●	4
SPVT110202	1	1	0.4N max.	For PC board (Reflow)	Right	Without	4.7×5.6×1.9	—	—	●	5
SPVT130202	1	1	0.4N max.	For PC board (Reflow)	Right	Without	4.7×5.6×1.9	—	—	●	6
SPVT120202	1	1	0.4N max.	For PC board (Reflow)	Right	Without	4.7×5.6×1.9	—	—	●	7
SPVT210104	1	1	0.4N max.	For PC board (Reflow)	Left	With	4.7×5.6×1.9	—	—	●	8
SPVT230103	1	1	0.4N max.	For PC board (Reflow)	Left	With	4.7×5.6×1.9	—	—	●	9
SPVT220103	1	1	0.4N max.	For PC board (Reflow)	Left	With	4.7×5.6×1.9	—	—	●	10
SPVT240103	1	1	0.4N max.	For PC board (Reflow)	Left	With	4.7×5.6×1.9	—	—	●	11
SPVT210202	1	1	0.4N max.	For PC board (Reflow)	Left	Without	4.7×5.6×1.9	—	—	●	12
SPVT230202	1	1	0.4N max.	For PC board (Reflow)	Left	Without	4.7×5.6×1.9	—	—	●	13
SPVT220202	1	1	0.4N max.	For PC board (Reflow)	Left	Without	4.7×5.6×1.9	—	—	●	14

⚠Note

1. This catalog shows only outline specifications. When using the products, please obtain formal specifications for supply.
2. Please place purchase orders for taping products per minimum order unit (1 reel or a case).
3. This products can be used in vehicles.
   Although these products are designed to perform over a wide operating temperature range, please ensure that you receive and read the formal delivery specifications before use.
4. For the Terminal Layout, please check our website.

Two-way Operation

SPVT Series

■ Packing Specifications

Taping

Number of packages(pcs.)			Tape width (mm)	Export package measurements (mm)
1 reel	1 case / Japan	1 case / export packing		
2,500	5,000	10,000	16	417 x 409 x 139

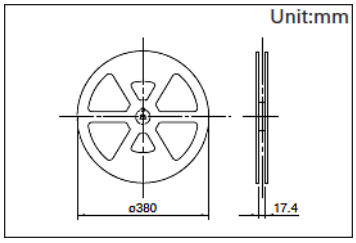

Drawing No.1

■ Dimensions

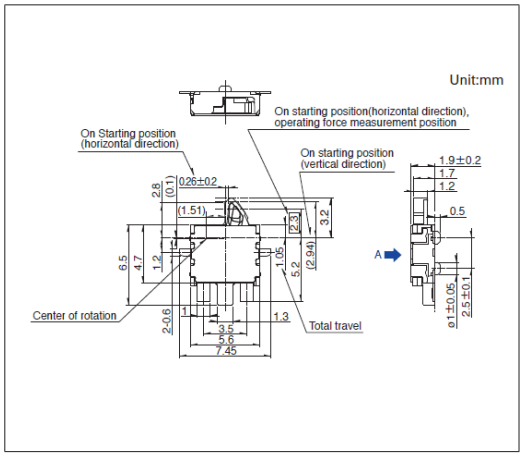

■ Land Dimensions

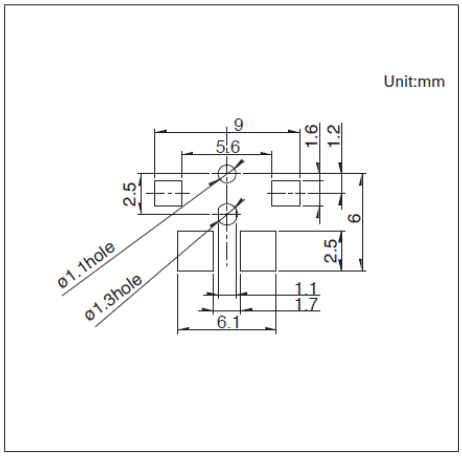

■ Circuit Diagram

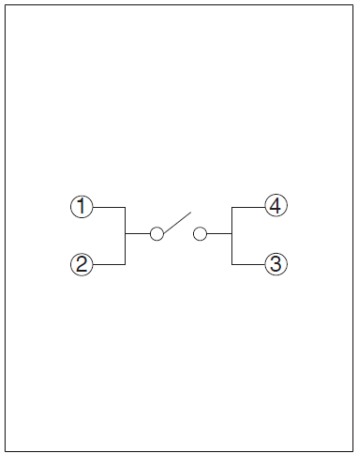

Viewed from direction A in the dimensions.

Drawing No.2

■ Dimensions

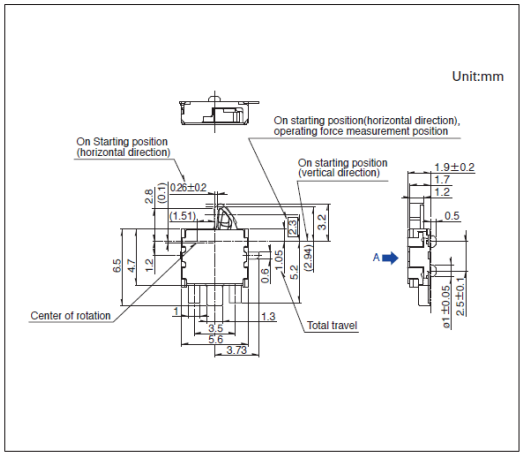

■ Land Dimensions

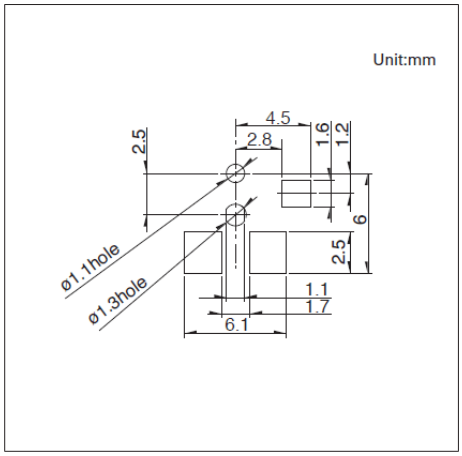

■ Circuit Diagram

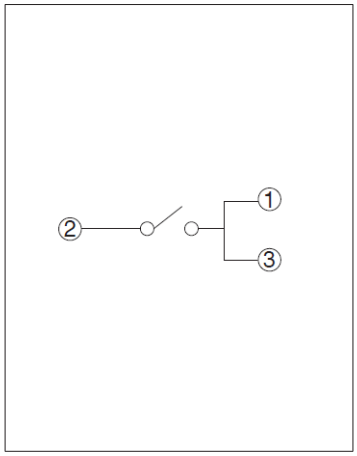

Viewed from direction A in the dimensions.

Drawing No.3

■ Dimensions

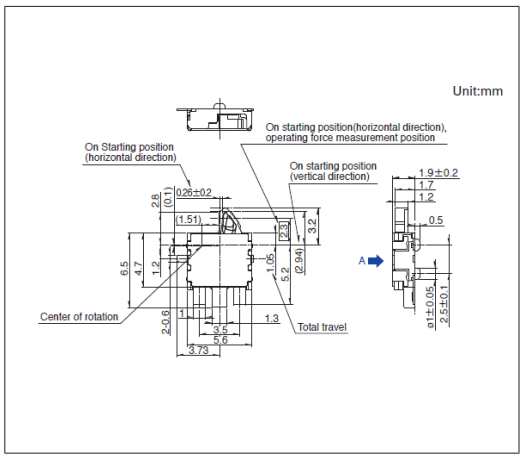

■ Land Dimensions

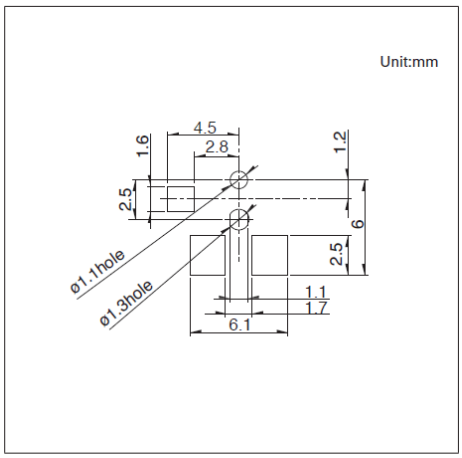

■ Circuit Diagram

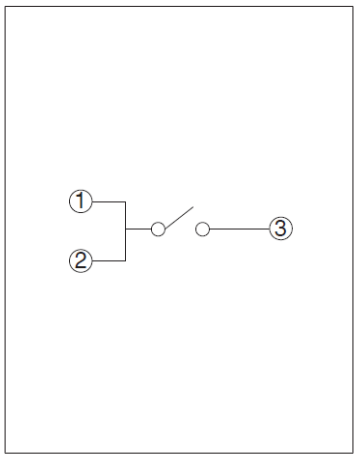

Viewed from direction A in the dimensions.

Drawing No.4

■ Dimensions

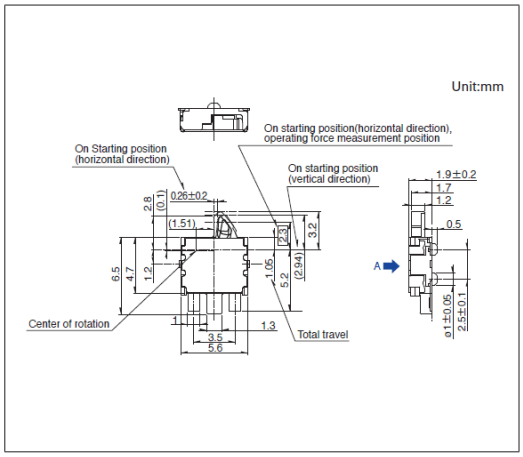

■ Land Dimensions

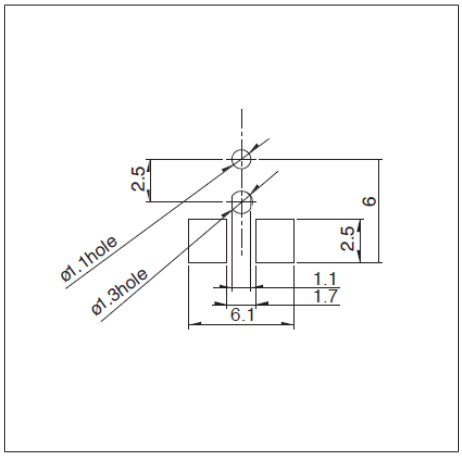

■ Circuit Diagram

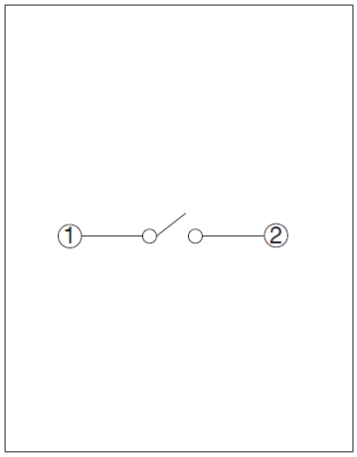

Viewed from direction A in the dimensions.

Drawing No.5

■ Dimensions

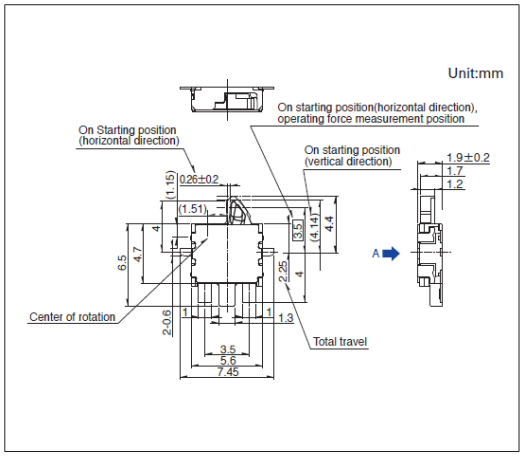

■ Land Dimensions

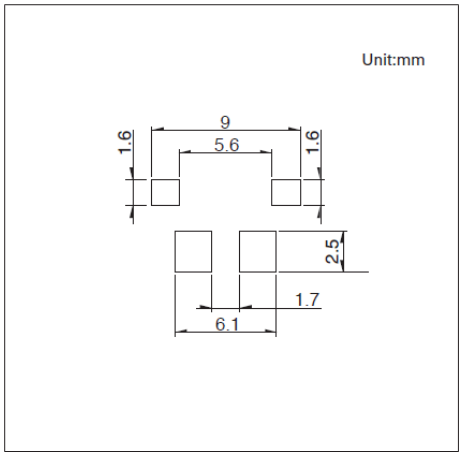

■ Circuit Diagram

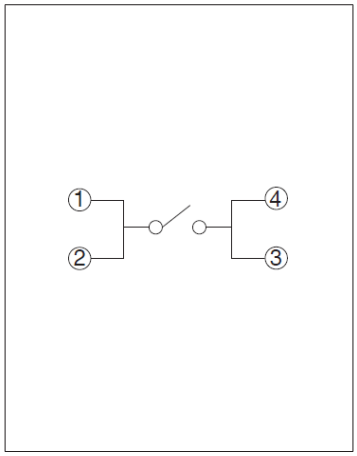

Viewed from direction A in the dimensions.

Drawing No.6

■ Dimensions

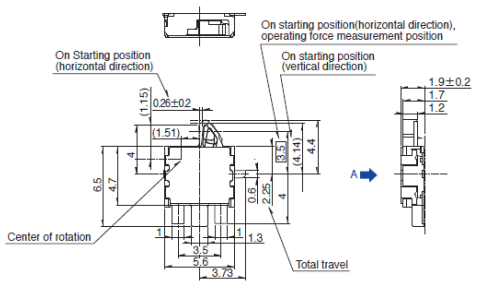

■ Land Dimensions

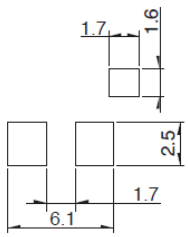

■ Circuit Diagram

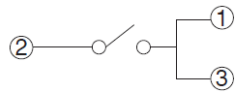

Viewed from direction A in the dimensions.

Drawing No.7

■ Dimensions

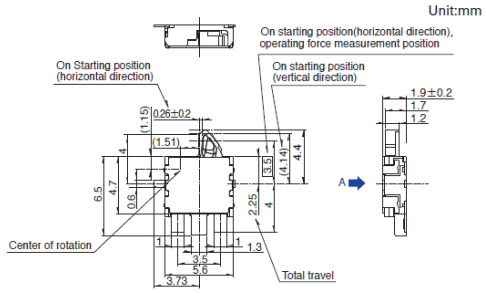

■ Land Dimensions

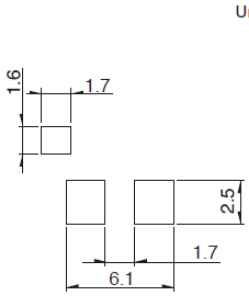

■ Circuit Diagram

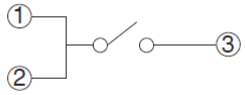

Viewed from direction A in the dimensions.

Drawing No.8

■ Dimensions

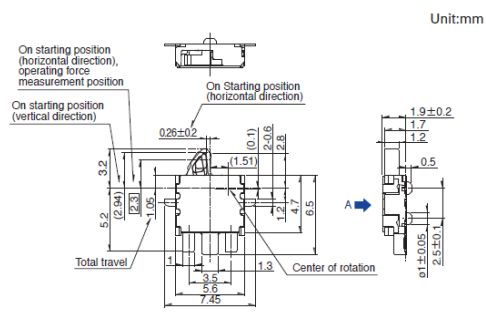

■ Land Dimensions

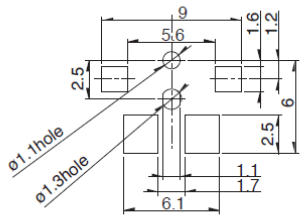

■ Circuit Diagram

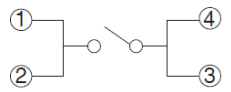

Viewed from direction A in the dimensions.

Drawing No.9

■ Dimensions

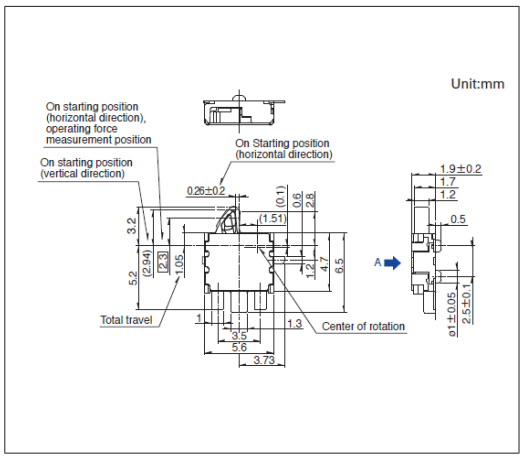

■ Land Dimensions

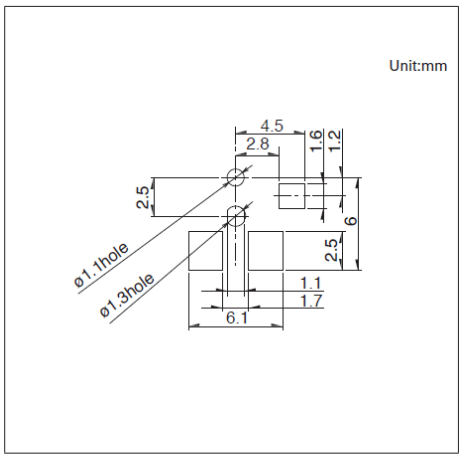

■ Circuit Diagram

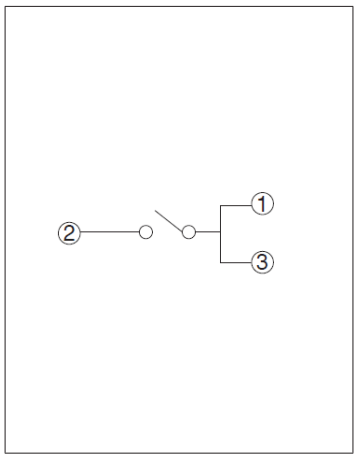

Viewed from direction A in the dimensions.

Drawing No.10

■ Dimensions

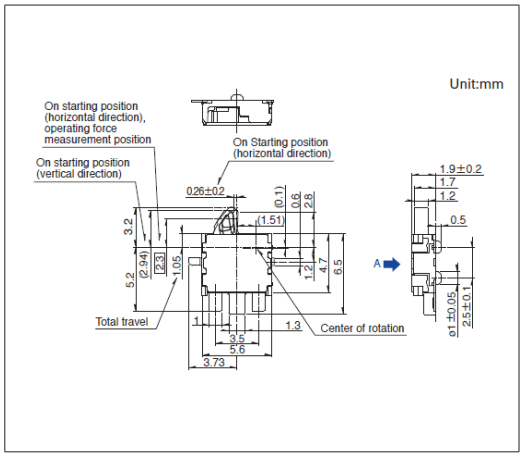

■ Land Dimensions

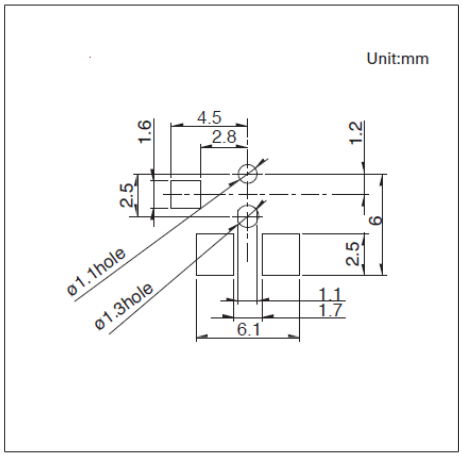

■ Circuit Diagram

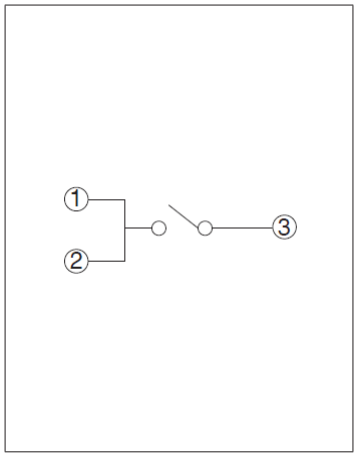

Viewed from direction A in the dimensions.

Drawing No.11

■ Dimensions

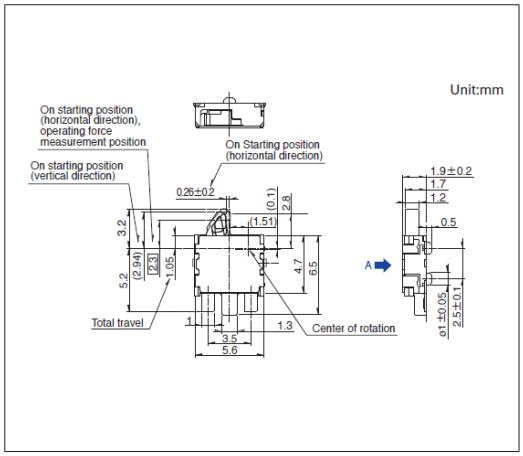

■ Land Dimensions

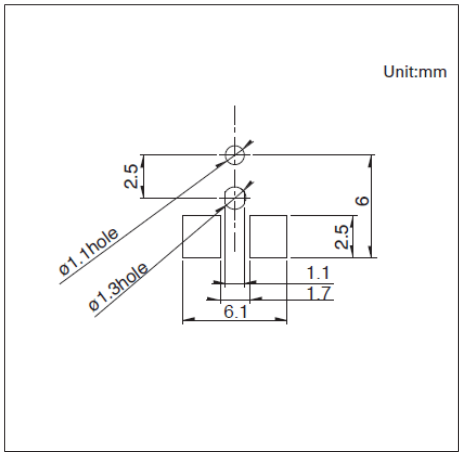

■ Circuit Diagram

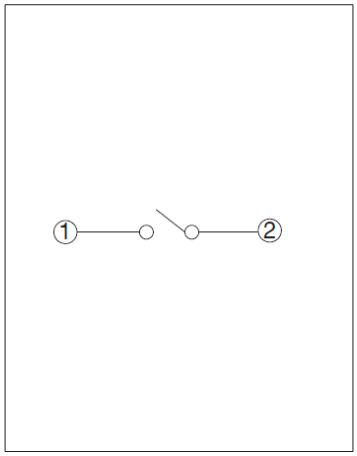

Viewed from direction A in the dimensions.

Drawing No.12

■ Dimensions

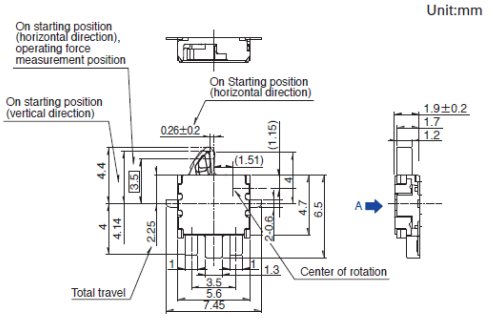

■ Land Dimensions

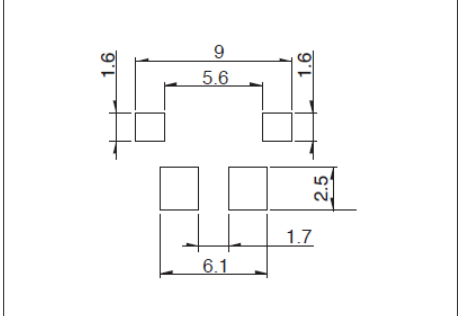

■ Circuit Diagram

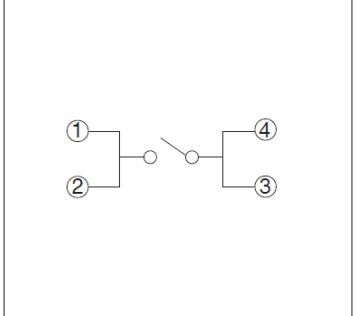

Viewed from direction A in the dimensions.

Drawing No.13

■ Dimensions

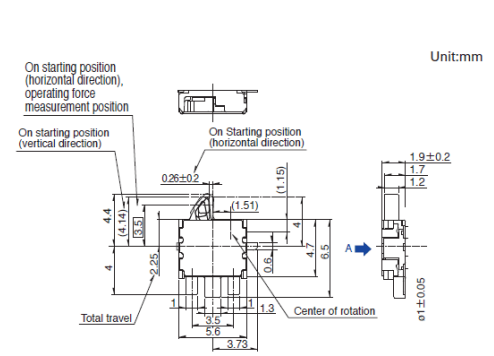

■ Land Dimensions

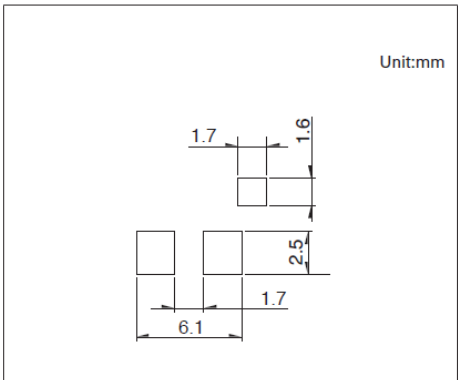

■ Circuit Diagram

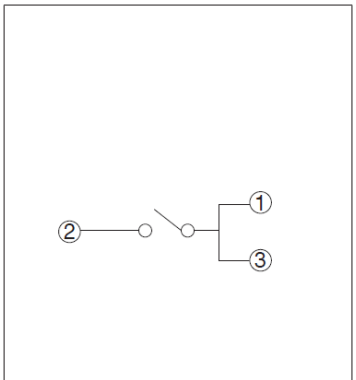

Viewed from direction A in the dimensions.

Drawing No.14

■ Dimensions

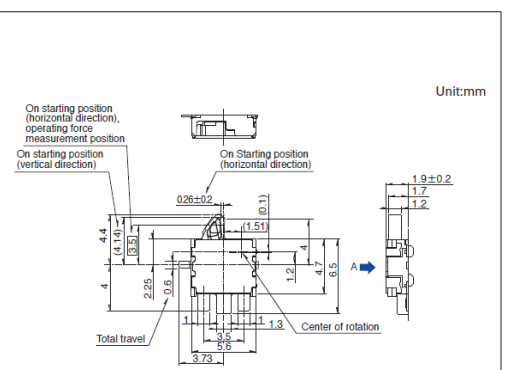

■ Land Dimensions

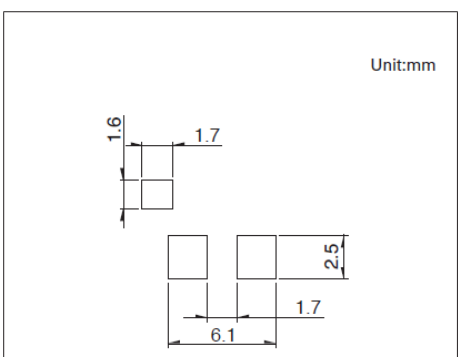

■ Circuit Diagram

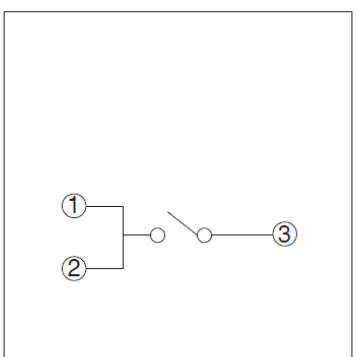

Viewed from direction A in the dimensions.

Compact Two-way Operation
SPVM Series

Compact type with a body height of 1.5mm, 3.5×2.8mm, pressable from two directions, vertical and horizontal.

Automotive

- Rating(max.)/(min.)(Resistive load):1mA 5V DC/50μA 3V DC
- Contact resistance(Initial/After operating life):2Ω max./5Ω max.
- Operating life without load:50,000 cycles
- Operating life with load Rating(max.)(Resistive load):
  50,000 cycles 5Ω max.

Applications:Mobile:Smartphones, tablets,Notebooks, peripherals
Healthcare:Healthcare equipment
Audio_TV:Cameras
Automotive:Navigation/audio systems, HVAC

■Product List

Products No.	Poles	Positions	Operating force	Terminal type	Location lug	Dimensions (W×D×H) (mm)	Water-proof	Dust-proof	Automotive	Drawing No.
SPVM110100	1	1	0.4N max.	For PC board (Reflow)	With	2.8×3.5×1.5	—	—	●	1
SPVM110200	1	1	0.4N max.	For PC board (Reflow)	Without	2.8×3.5×1.5	—	—	●	2

⚠Note

1. This catalog shows only outline specifications. When using the products, please obtain formal specifications for supply.
2. Please place purchase orders per minimum order unit (integer).
3. This products can be used in vehicles.
   Although these products are designed to perform over a wide operating temperature range, please ensure that you receive and read the formal delivery specifications before use.
4. For the Terminal Layout, please check our website.

■Packing Specifications

Taping

Number of packages(pcs.)			Tape width (mm)	Export package measurements (mm)
1 reel	1 case / Japan	1 case / export packing		
3,000	6,000	12,000	16	417 x 409 x 139

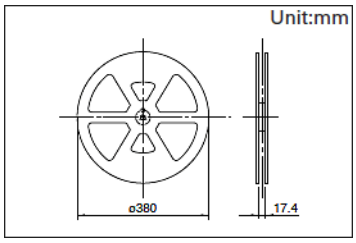

Drawing No.1

■ Dimensions

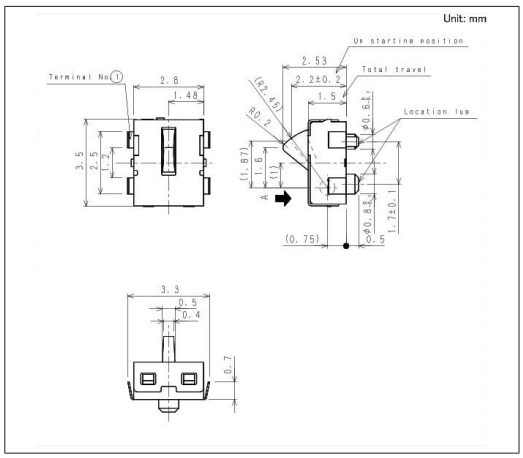

■ Land Dimensions

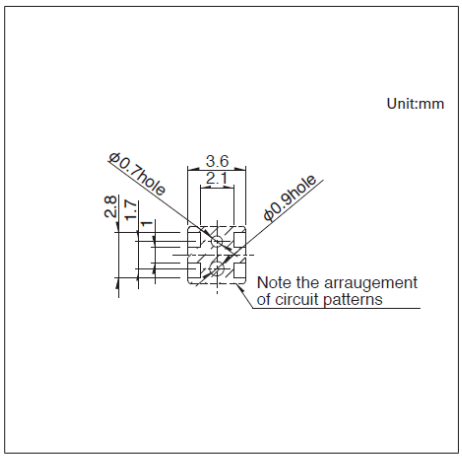

■ Circuit Diagram

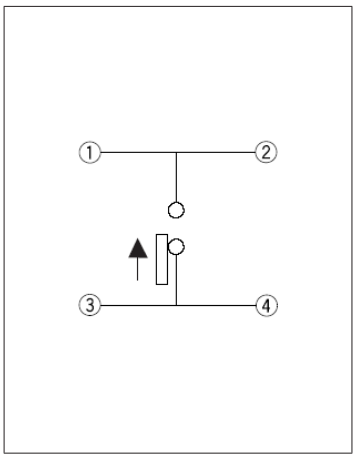

Viewed from direction A in the dimensions.

Drawing No.2

■ Dimensions

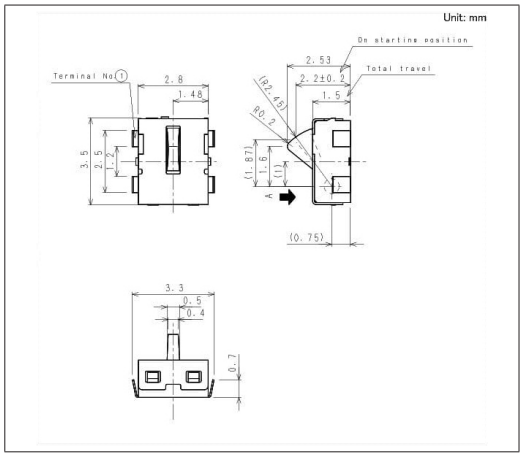

■ Land Dimensions

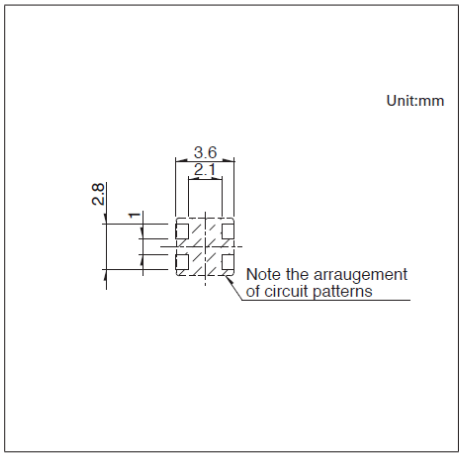

■ Circuit Diagram

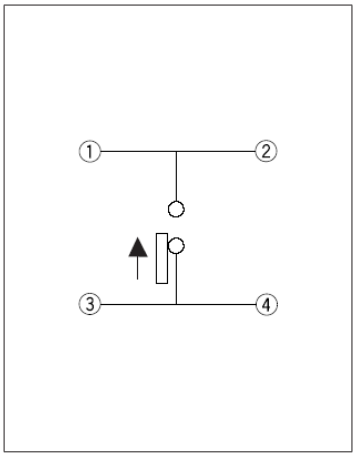

Viewed from direction A in the dimensions.

Low-profile Lever

SPVR Series

Thin-profile long-stroke type with a body height of 1.2mm, 4.2×3.6mm.

Automotive

- Rating(max.)/(min.)(Resistive load):1mA 5V DC/100μA 3V DC
- Contact resistance(Initial/After operating life):3Ω max./5Ω max.
- Operating life without load:50,000 cycles
- Operating life with load Rating(max.)(Resistive load):
  50,000 cycles 5Ω max.

Applications:Mobile:Smartphones, tablets,Notebooks, peripherals
Healthcare:Healthcare equipment
Audio_TV:Cameras
Automotive:Navigation/audio systems, HVAC

■ Product List

Products No.	Poles	Positions	Operating force	Terminal type	Total travel position	Location lug	Dimensions (W×D×H) (mm)	Water-proof	Dust-proof	Automotive	Drawing No.
SPVR110102	1	1	0.35N max.	For PC board (Reflow)	1.93	With	3.6×4.2×1.2	—	—	●	1
SPVR120102	1	1	0.35N max.	For PC board (Reflow)	1.93	Without	3.6×4.2×1.2	—	—	●	2

⚠Note

1. This catalog shows only outline specifications. When using the products, please obtain formal specifications for supply.
2. Please place purchase orders per minimum order unit (integer).
3. This products can be used in vehicles.
   Although these products are designed to perform over a wide operating temperature range, please ensure that you receive and read the formal delivery specifications before use.
4. For the Terminal Layout, please check our website.

■ Packing Specifications

Taping

Number of packages(pcs.)			Tape width (mm)	Export package measurements (mm)
1 reel	1 case / Japan	1 case / export packing		
2,500	5,000	10,000	16	417 x 409 x 139

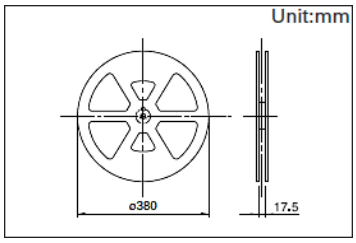

Drawing No.1

■ Dimensions

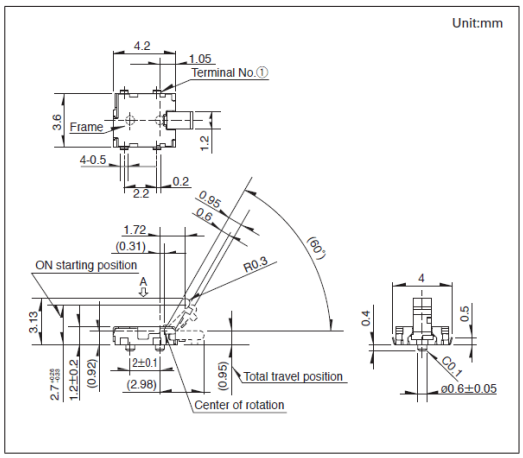

■ Land Dimensions

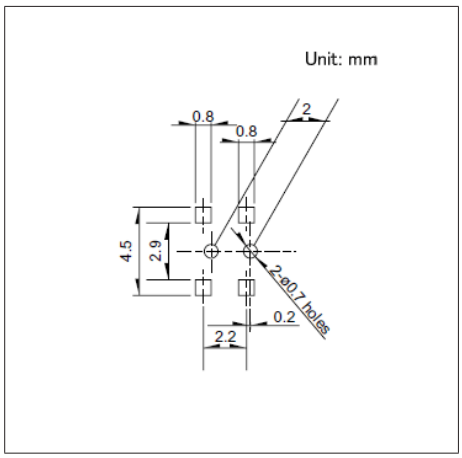

■ Circuit Diagram

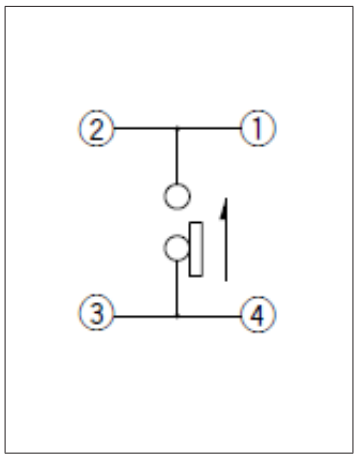

Viewed from direction A in the dimensions.

Drawing No.2

■ Dimensions

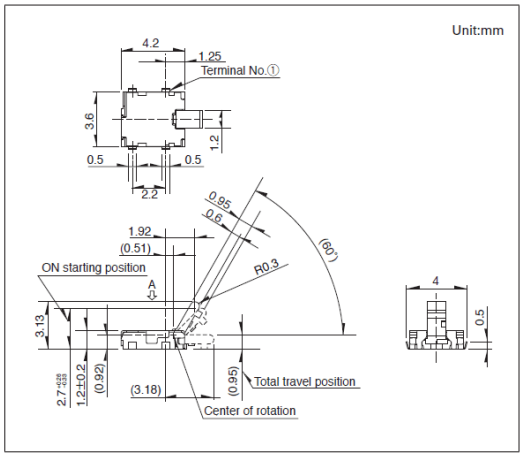

■ Land Dimensions

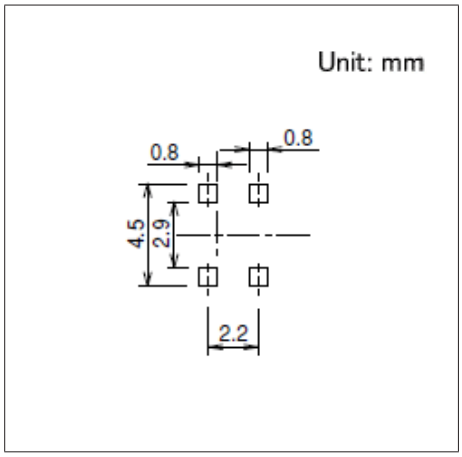

■ Circuit Diagram

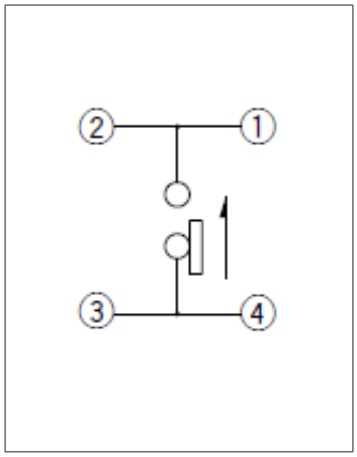

Viewed from direction A in the dimensions.

Compact One-way Operation
SPVE Series

Industry's smallest class type with dimensions of 3.4×3.0mm.

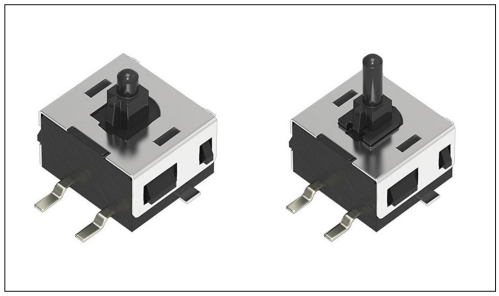

- Rating(max.)/(min.)(Resistive load):0.1A 30V DC/50μA 3V DC
- Contact resistance(Initial/After operating life):500mΩ max./1Ω max.
- Operating life without load:50,000 cycles
- Operating life with load Rating(max.)(Resistive load):
  50,000 cycles 1Ω max.

Applications:Mobile:Smartphones, tablets,Notebooks, peripherals
Audio_TV:Cameras

■ Product List

Products No.	Poles	Positions	Operating force	Terminal type	Slider height	ON start position	Total travel position	Location lug	Dimensions (W×D×H) (mm)	Water-proof	Dust-proof	Automotive	Drawing No.
SPVE110100	1	1	0.3N max.	For PC board (Reflow)	3.8	3.5	2.5	Without	3.4×3.0×2.3	—	—	—	1
SPVE110600	1	1	0.3N max.	For PC board (Reflow)	3.8	3.5	2.5	With	3.4×3.0×2.3	—	—	—	2
SPVE110401	1	1	0.3N max.	For PC board (Reflow)	4.1	3.8	2.9	Without	3.4×3.0×2.3	—	—	—	3
SPVE110801	1	1	0.3N max.	For PC board (Reflow)	4.1	3.8	2.9	With	3.4×3.0×2.3	—	—	—	4
SPVE110200	1	1	0.3N max.	For PC board (Reflow)	4.8	4.5	3.6	Without	3.4×3.0×2.3	—	—	—	5
SPVE110900	1	1	0.3N max.	For PC board (Reflow)	4.8	4.5	3.6	With	3.4×3.0×2.3	—	—	—	6
SPVE111300	1	1	0.3N max.	For PC board (Reflow)	5.2	4.9	4.0	With	3.4×3.0×2.3	—	—	—	7
SPVE111200	1	1	0.3N max.	For PC board (Reflow)	5.5	5.2	4.3	With	3.4×3.0×2.3	—	—	—	8
SPVE210100	1	1	0.3N max.	For PC board (Reflow)	3.3	3.0	2.0	—	3.4×4.0×1.8	—	—	—	9

⚠Note

1. This catalog shows only outline specifications. When using the products, please obtain formal specifications for supply.
2. Please place purchase orders for taping products per minimum order unit (1 reel or a case).
3. For the Terminal Layout, please check our website.

■ Packing Specifications

Taping

Products No.	Number of packages(pcs.)			Tape width (mm)	Export package measurements (mm)
	1 reel	1 case / Japan	1 case / export packing		
SPVE110100 **SPVE110600** **SPVE110401** **SPVE110801** **SPVE210100**	2,800	5,600	22,400	12	406×406×190
SPVE110200 **SPVE110900**	2,200	4,400	17,600	12	406×406×190
SPVE111300 **SPVE111200**	2,000	4,000	16,000	12	406×406×190

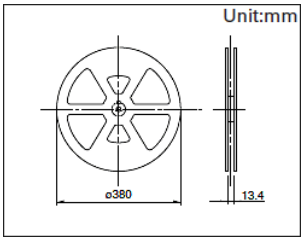

Drawing No.1

■ Dimensions

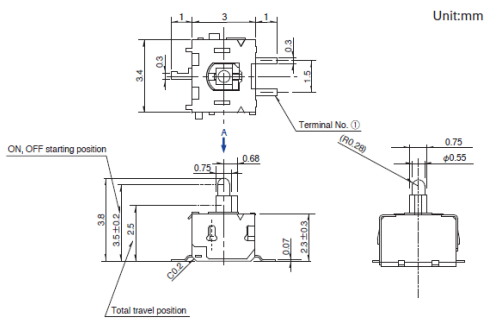

■ Land Dimensions

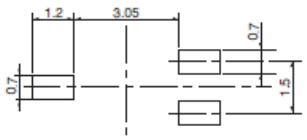

■ Circuit Diagram

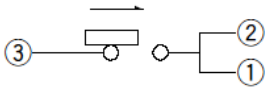

Viewed from direction A in the dimensions.

Drawing No.2

■ Dimensions

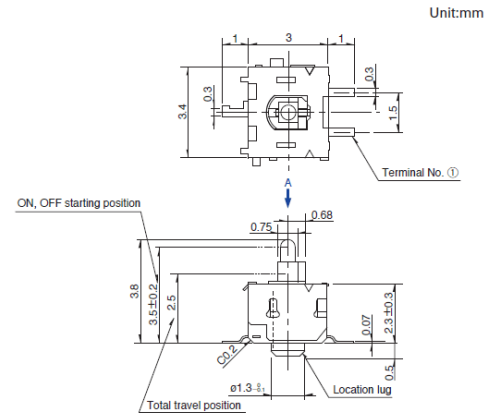

■ Land Dimensions

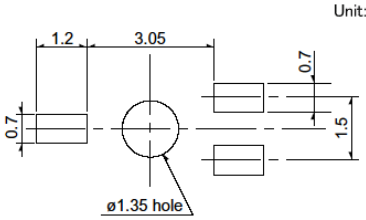

■ Circuit Diagram

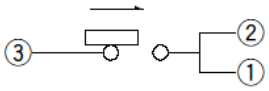

Viewed from direction A in the dimensions.

Drawing No.3

■ Dimensions

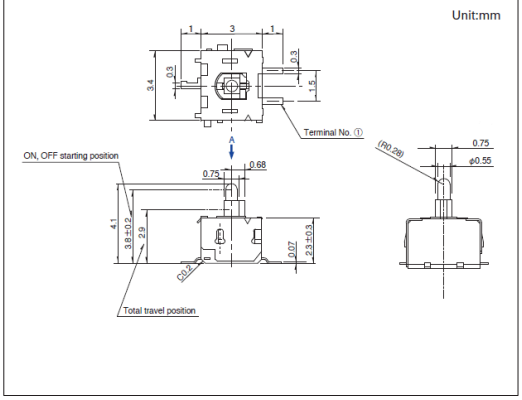

■ Land Dimensions

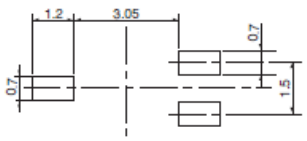

■ Circuit Diagram

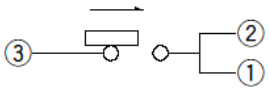

Viewed from direction A in the dimensions.

Drawing No.4

■ Dimensions

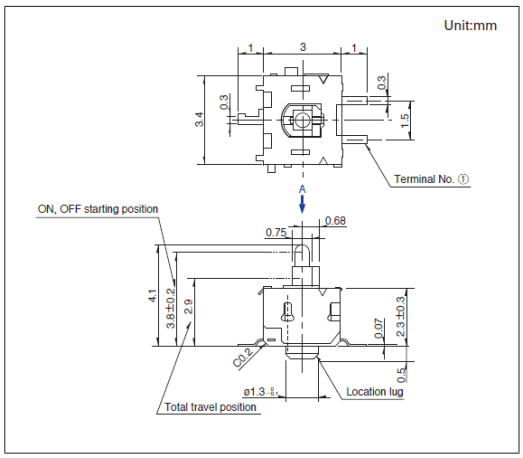

■ Land Dimensions

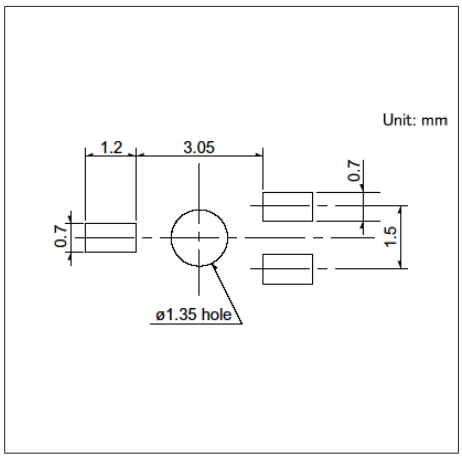

■ Circuit Diagram

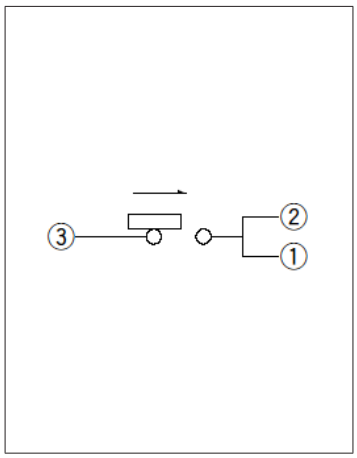

Viewed from direction A in the dimensions.

Drawing No.5

■ Dimensions

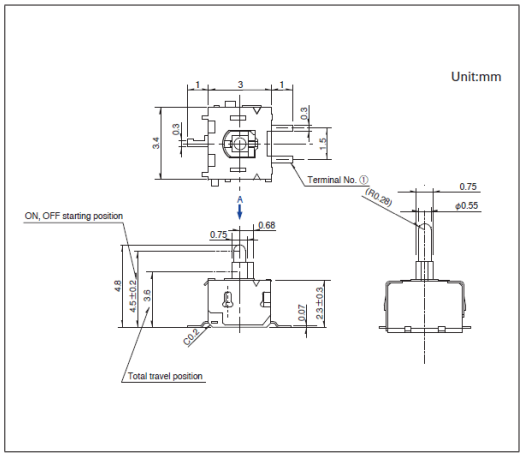

■ Land Dimensions

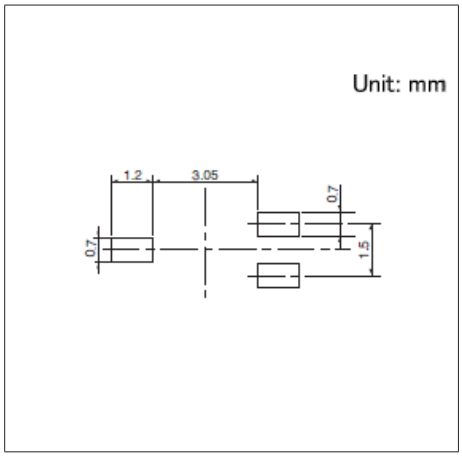

■ Circuit Diagram

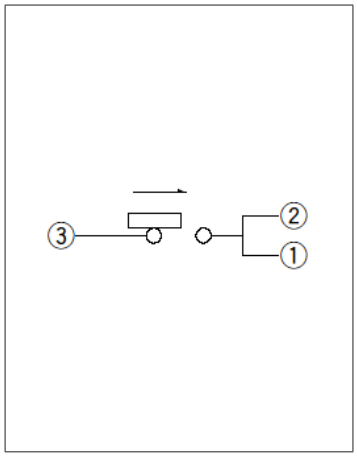

Viewed from direction A in the dimensions.

Drawing No.6

■ Dimensions

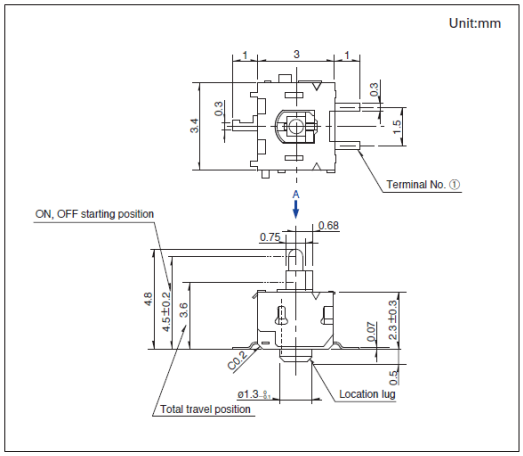

■ Land Dimensions

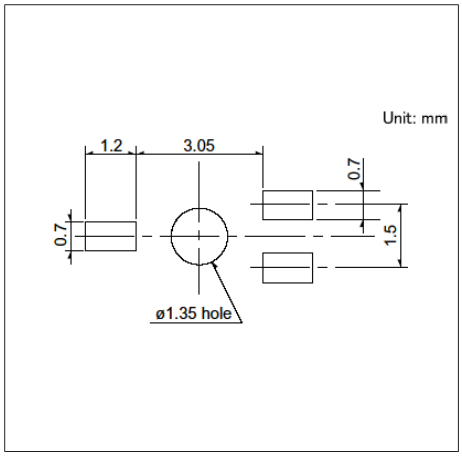

■ Circuit Diagram

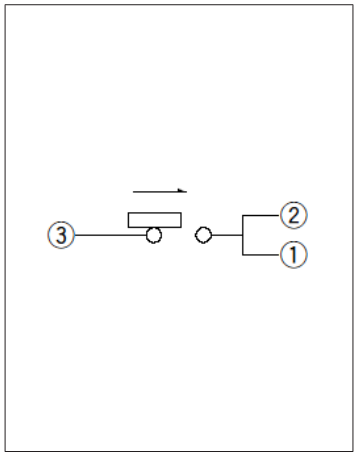

Viewed from direction A in the dimensions.

Drawing No.7

■ Dimensions

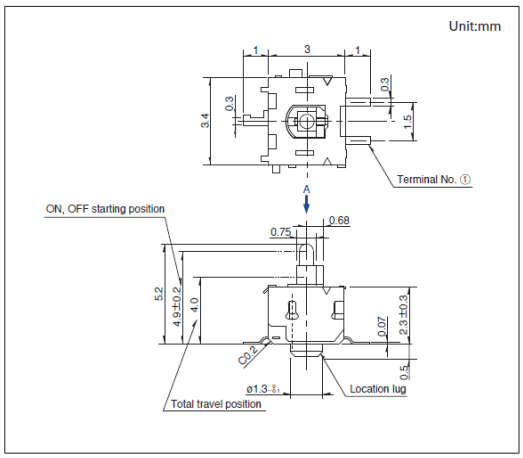

■ Land Dimensions

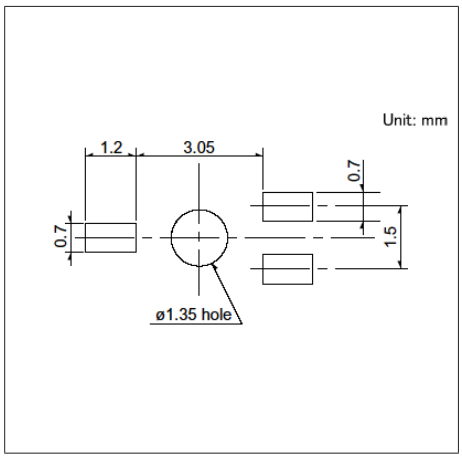

■ Circuit Diagram

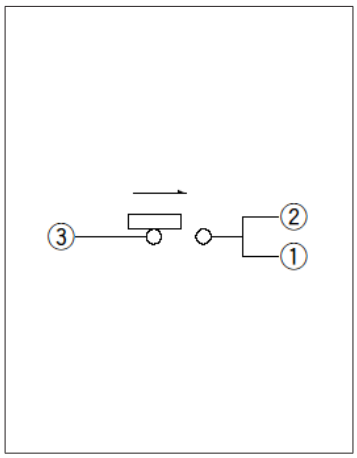

Viewed from direction A in the dimensions.

Drawing No.8

■ Dimensions

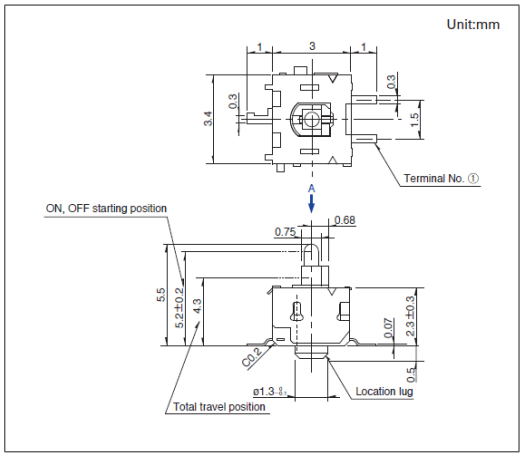

■ Land Dimensions

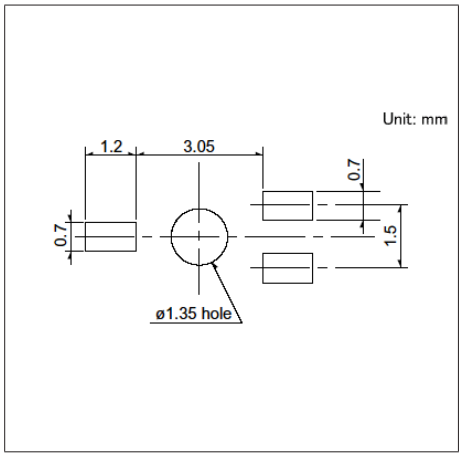

■ Circuit Diagram

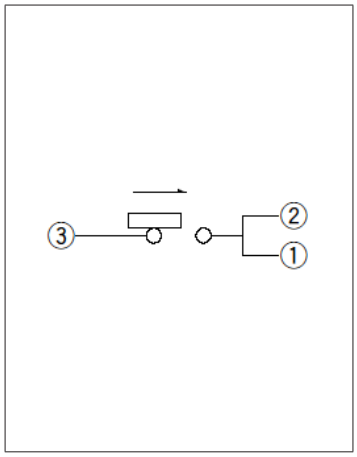

Viewed from direction A in the dimensions.

Drawing No.9

■ Dimensions

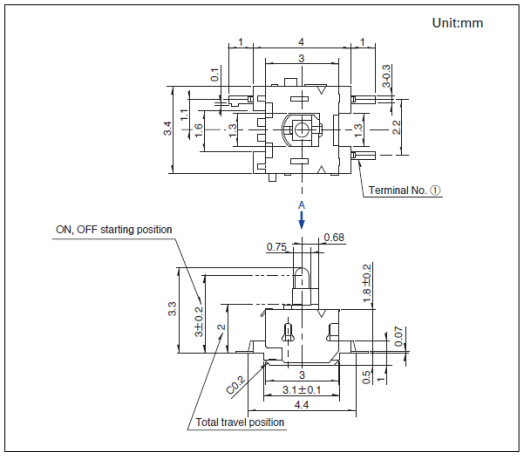

■ Land Dimensions

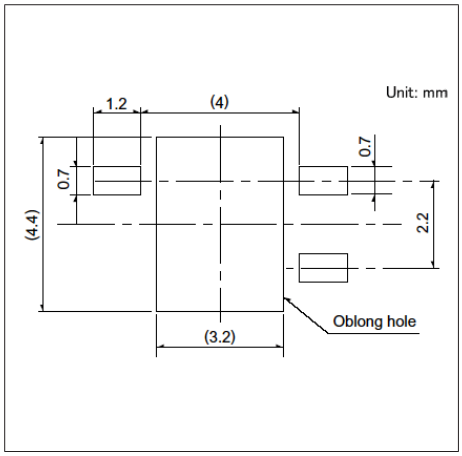

■ Circuit Diagram

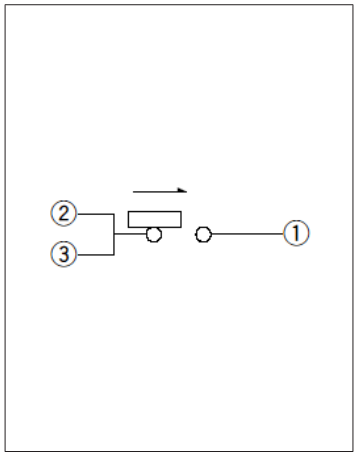

Viewed from direction A in the dimensions.

Compact Two-way, Two-step Detection

SSCQ Series

Two-stage detection type, 30% smaller than conventional products, among the smallest in the industry.

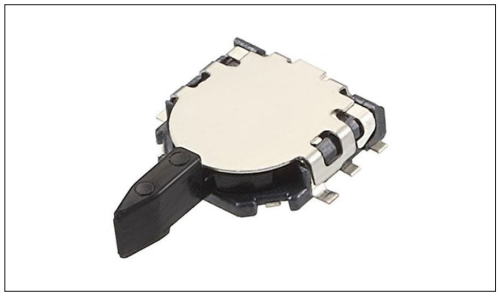

- Rating(max.)/(min.)(Resistive load):1mA 5V DC/50μA 3V DC
- Contact resistance(Initial/After operating life):2Ω max./5Ω max.
- Operating life without load:50,000 cycles
- Operating life with load Rating(max.)(Resistive load):
  50,000 cycles 5Ω max.

Applications:Audio_TV:Cameras

■ Product List

Products No.	Poles	Positions	Operating force	Total travel position	Location lug	Dimensions (W×D×H) (mm)	Water-proof	Dust-proof	Automotive	Drawing No.
SSCQ110100	1	Two-direction, 2-positions each side	0.35N max.	3.73	With	3.8×3.6×0.9	—	—	—	1
SSCQ120102	1	Two-direction, 2-positions each side	0.35N max.	3.73	Without	3.8×3.6×0.9	—	—	—	2

⚠Note

1. This catalog shows only outline specifications. When using the products, please obtain formal specifications for supply.
2. Please place purchase orders for taping products per minimum order unit (1 reel or a case).
3. For the Terminal Layout, please check our website.

■ Packing Specifications

Taping

Number of packages(pcs.)			Tape width (mm)	Export package measurements (mm)
1 reel	1 case / Japan	1 case / export packing		
4,000	8,000	16,000	16	417 x 409 x 139

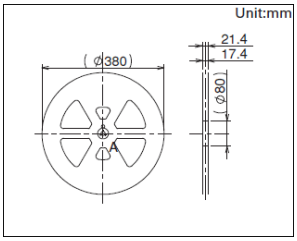

Drawing No.1

■ Dimensions

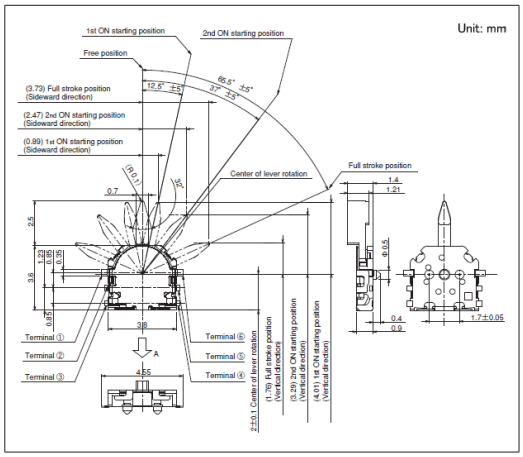

■ Land Dimensions

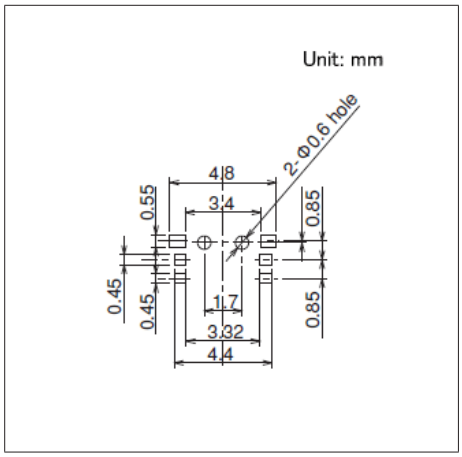

■ Circuit Diagram

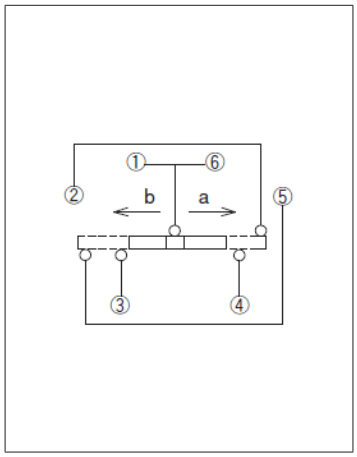

Drawing No.2

■ Dimensions

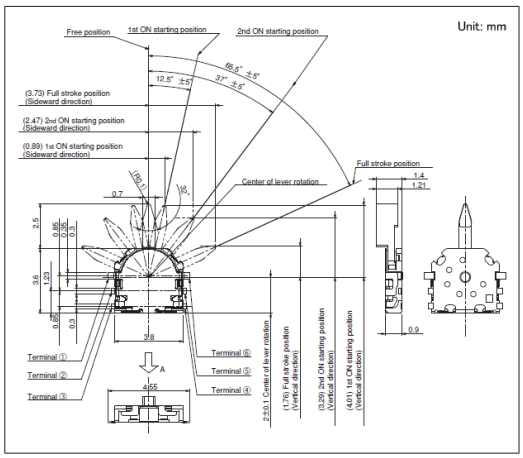

■ Land Dimensions

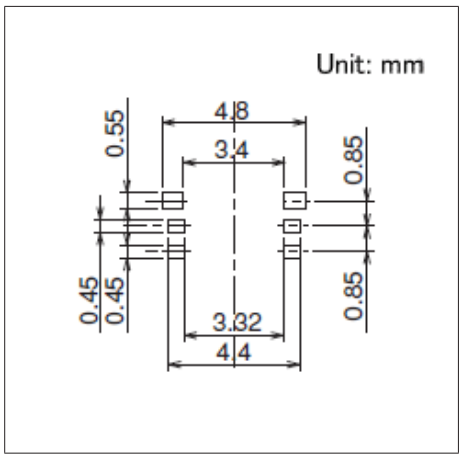

■ Circuit Diagram

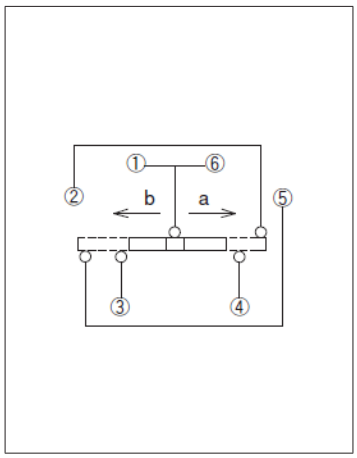

Compact Two-way Detection
SSCM Series

Thin-profile type with a body height of 1.5mm, capable of detecting two lateral directions.

- Rating(max.)/(min.)(Resistive load):1mA 5V DC/50μA 3V DC
- Contact resistance(Initial/After operating life):2Ω max./5Ω max.
- Operating life without load:50,000 cycles
- Operating life with load Rating(max.)(Resistive load):
  50,000 cycles 5Ω max.

Applications:Mobile:Smartphones, tablets,Headsets, wearables, Notebooks, peripherals
Game:Home handheld consoles,Virtual/augmented reality
Healthcare:Healthcare equipment
Audio_TV:Audio,Cameras

■ Product List

Products No.	Poles	Positions	Operating force	Terminal type	Total travel position	Location lug	Dimensions (W×D×H) (mm)	Water-proof	Dust-proof	Automotive	Drawing No.
SSCM110100	1	2	0.35N max.	For PC board (Reflow)	1.57	With	4.0×5.0×1.5	—	—	—	1
SSCM120100	1	2	0.35N max.	For PC board (Reflow)	1.57	Without	4.0×5.0×1.5	—	—	—	2

⚠Note

1. This catalog shows only outline specifications. When using the products, please obtain formal specifications for supply.
2. Please place purchase orders for taping products per minimum order unit (1 reel or a case).
3. For the Terminal Layout, please check our website.

■ Packing Specifications

Taping

Number of packages(pcs.)			Tape width (mm)	Export package measurements (mm)
1 reel	1 case / Japan	1 case / export packing		
3,000	6,000	12,000	16	417 x 409 x 139

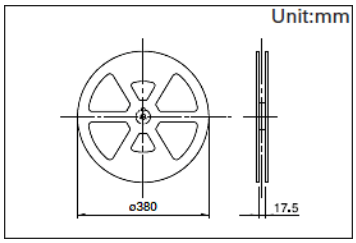

Drawing No.1

■ Dimensions

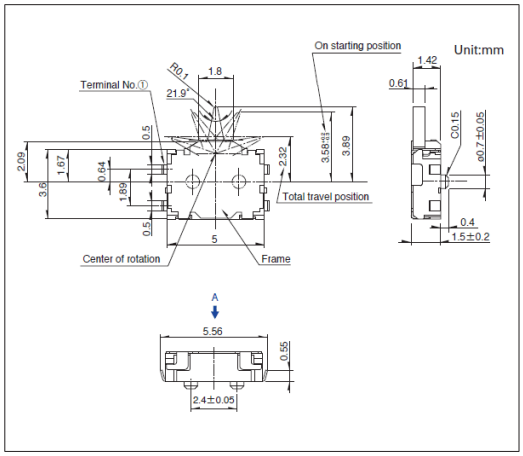

■ Land Dimensions

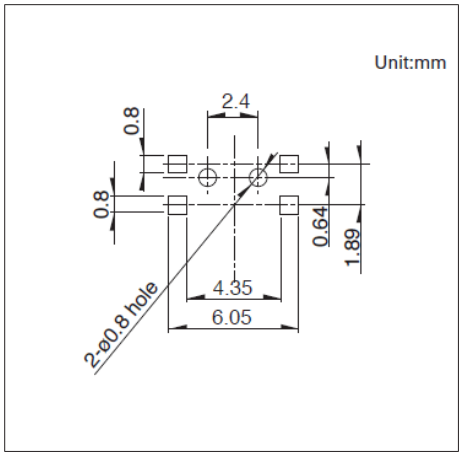

■ Circuit Diagram

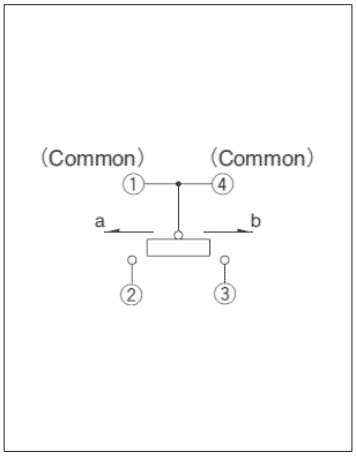

Viewed from direction A in the dimensions.

Drawing No.2

■ Dimensions

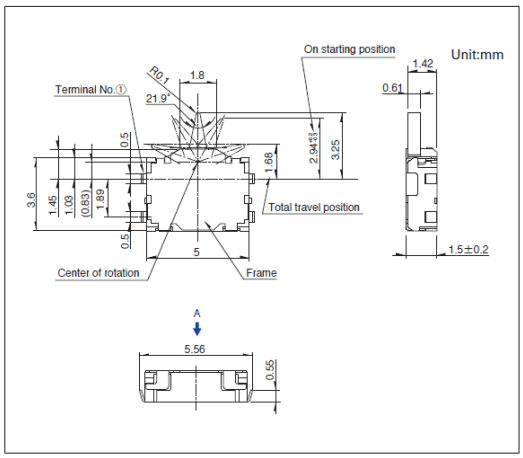

■ Land Dimensions

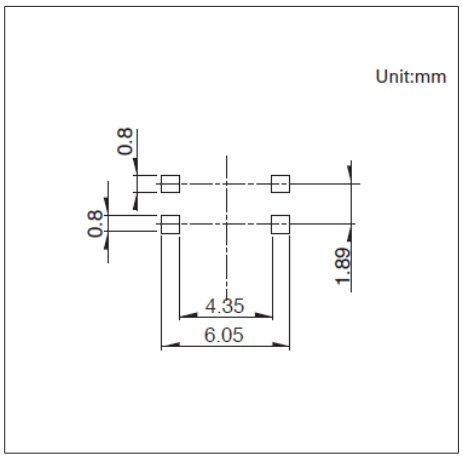

■ Circuit Diagram

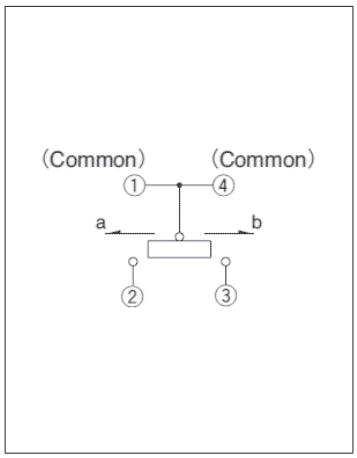

Viewed from direction A in the dimensions.

Low-profile Tri-directional Operation

SPVL Series

Thin-profile type with a body height of 1.0mm, offering 180° flexible operation.

Automotive

- Rating(max.)/(min.)(Resistive load):1mA 5V DC/50μA 3V DC
- Contact resistance(Initial/After operating life):2Ω max./5Ω max.
- Operating life without load:50,000 cycles
- Operating life with load Rating(max.)(Resistive load):
  50,000 cycles 5Ω max.

Applications:Mobile:Smartphones, tablets,Notebooks, peripherals
Healthcare:Healthcare equipment
Audio_TV:Cameras
Automotive:Navigation/audio systems, HVAC

■ Product List

Products No.	Poles	Positions	Operating force	Terminal type	Location lug	Dimensions (W×D×H) (mm)	Water-proof	Dust-proof	Automotive	Drawing No.
SPVL110102	1	1	0.35N max.	For PC board (Reflow)	With	6.6×5.55×1.0	—	—	●	1
SPVL120101	1	1	0.35N max.	For PC board (Reflow)	Without	6.6×5.55×1.0	—	—	●	2

⚠Note

1. This catalog shows only outline specifications. When using the products, please obtain formal specifications for supply.
2. Please place purchase orders per minimum order unit (integer).
3. This products can be used in vehicles.
   Although these products are designed to perform over a wide operating temperature range, please ensure that you receive and read the formal delivery specifications before use.
4. For the Terminal Layout, please check our website.

■ Packing Specifications

Taping

Number of packages(pcs.)			Tape width (mm)	Export package measurements (mm)
1 reel	1 case / Japan	1 case / export packing		
5,000	10,000	20,000	16	417 x 409 x 139

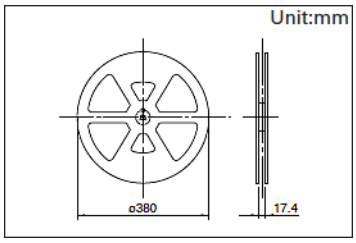

Low-profile Tri-directional Operation

SPVL Series

Drawing No.1

■ Dimensions

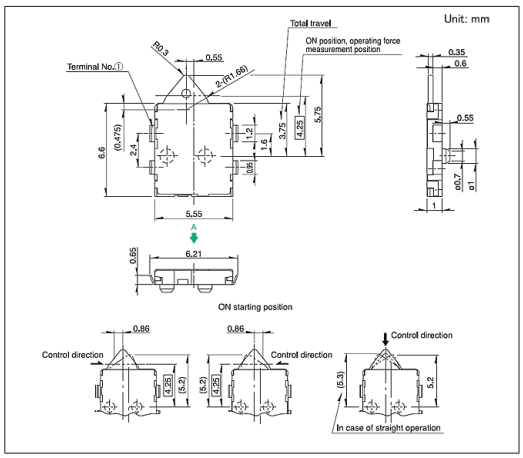

■ Land Dimensions

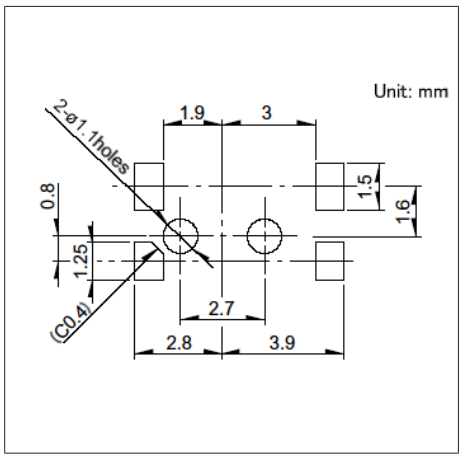

■ Circuit Diagram

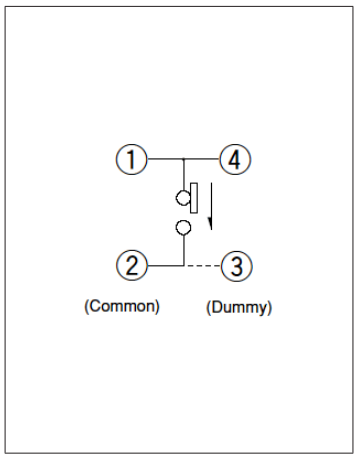

Viewed from direction A in the dimensions.

Drawing No.2

■ Dimensions

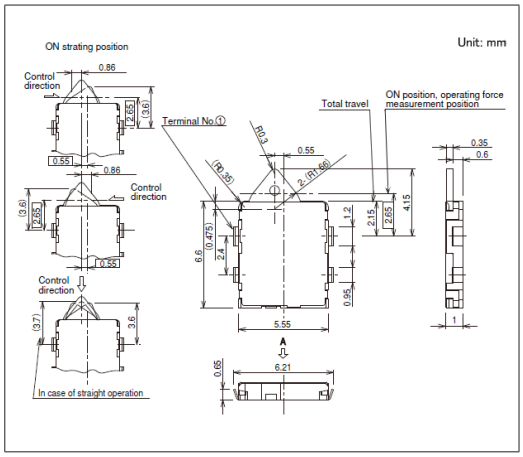

■ Land Dimensions

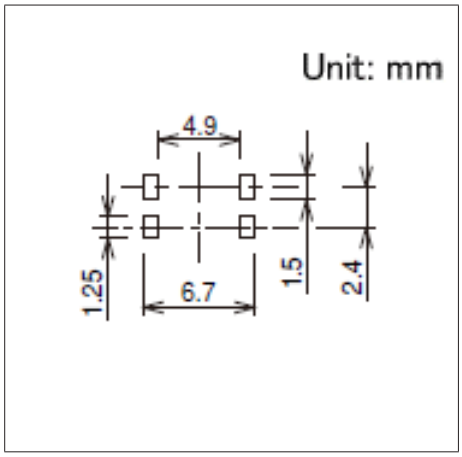

■ Circuit Diagram

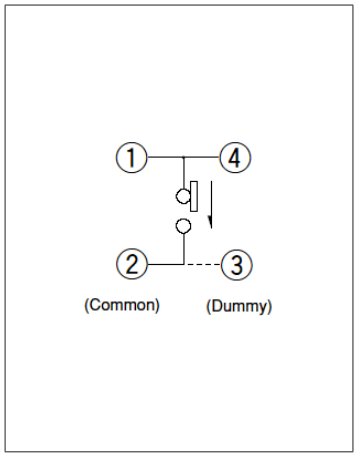

Viewed from direction A in the dimensions.

General-purpose Type
SPPB Series

Wide product variety supporting various digital devices.

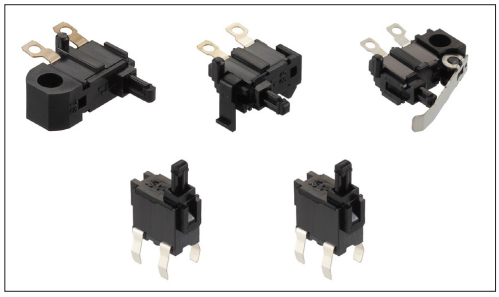

Automotive

- Rating(max.)/(min.)(Resistive load):0.1A 30V DC/50μA 3V DC
- Contact resistance(Initial/After operating life):1Ω max./2Ω max.
- Operating life without load:50,000 cycles
- Operating life with load Rating(max.)(Resistive load):
  50,000 cycles 2Ω max.

Applications:Healthcare:Healthcare equipment
Home:Major home appliances
Audio_TV:Audio
Automotive:Navigation/audio systems, HVAC

■ Product List

Products No.	Poles	Positions	Operating force	Operation part shape	Terminal type	Dimensions (W×D×H) (mm)	Water-proof	Dust-proof	Automotive	Drawing No.
SPPB110300	1	1	0.35N max.	Push	For Lead	9.7×3.75×5.1	—	—	●	1
SPPB120200	1	1	0.35N max.	Push	For Lead	9.7×3.75×5.1	—	—	●	2
SPPB310400	1	1	0.35N max.	Push	For Lead	8.8×3.5×5.1	—	—	●	3
SPPB320100	1	1	0.35N max.	Push	For Lead	8.8×3.5×5.1	—	—	●	4
SPPB1A0100	1	1	0.35N max.	Actuator A	For Lead	9.75×3.75×5.7	—	—	●	5
SPPB1A0101	1	1	0.35N max.	Actuator A	For Lead	9.75×3.75×5.7	—	—	●	6
SPPB2A0100	1	1	0.35N max.	Actuator C	For Lead	9.75×3.75×5.7	—	—	●	7
SPPB2A0101	1	1	0.35N max.	Actuator C	For Lead	9.75×3.75×5.7	—	—	●	8
SPPB512300	1	1	0.35N max.	Push	For PC board (Dip)	6.3×3.0×4.9	—	—	●	9
SPPB610400	1	1	0.35N max.	Push	For PC board (Dip)	6.3×5.1×3.7	—	—	●	10
SPPB620300	1	1	0.35N max.	Push	For PC board (Dip)	6.3×5.1×3.7	—	—	●	11
SPPB5A0100	1	1	0.35N max.	Actuator A	For PC board (Dip)	9.15×3.75×5.5	—	—	●	12
SPPB6A0100	1	1	0.35N max.	Actuator A	For PC board (Dip)	10.0×6.1×5.25	—	—	●	13
SPPB6A0400	1	1	0.35N max.	Actuator A	For PC board (Dip)	10.0×6.1×5.25	—	—	●	14
SPPB530701	1	1	0.35N max.	Push	For PC board (Reflow)	6.5×3.1×4.9	—	—	●	15
SPPB530601	1	1	0.35N max.	Push	For PC board (Reflow)	6.4×3.0×4.9	—	—	●	16
SPPB630101	1	1	0.35N max.	Push	For PC board (Reflow)	6.3×6.1×4.25	—	—	●	17
SPPB640201	1	1	0.35N max.	Push	For PC board (Reflow)	6.3×6.1×4.25	—	—	●	18

⚠Note

1. This catalog shows only outline specifications. When using the products, please obtain formal specifications for supply.
2. Please place purchase orders per minimum order unit (integer).
3. Please place purchase orders for taping products per minimum order unit (1 reel or a case).
4. This products can be used in vehicles.
   Although these products are designed to perform over a wide operating temperature range, please ensure that you receive and read the formal delivery specifications before use.

■ Packing Specifications

Bulk

Products No.	Number of packages(pcs.)		Export package measurements (mm)
	1 case / Japan	1 case / export packing	
SPPB110300 **SPPB120200** **SPPB310400** **SPPB320100** **SPPB610400** **SPPB620300**	2,000	10,000	400 x 270 x 290
SPPB1A0100 **SPPB1A0101** **SPPB2A0100** **SPPB2A0101** **SPPB5A0100** **SPPB6A0100** **SPPB6A0400**	1,000	5,000	400 x 270 x 290
SPPB512300	4,000	20,000	400 x 270 x 290

Taping

Products No.	Number of packages(pcs.)			Tape width (mm)	Export package measurements (mm)
	1 reel	1 case / Japan	1 case / export packing		
SPPB530701	1,500	3,000	6,000	24	406×406×160
SPPB530601	600	1,200	2,400	24	406×406×160
SPPB630101 **SPPB640201**	1,300	2,600	5,200	24	406×406×160

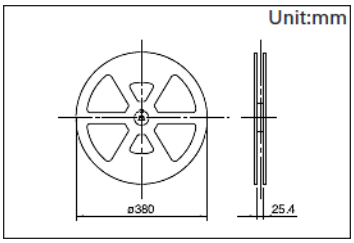

Drawing No.1

■ Dimensions

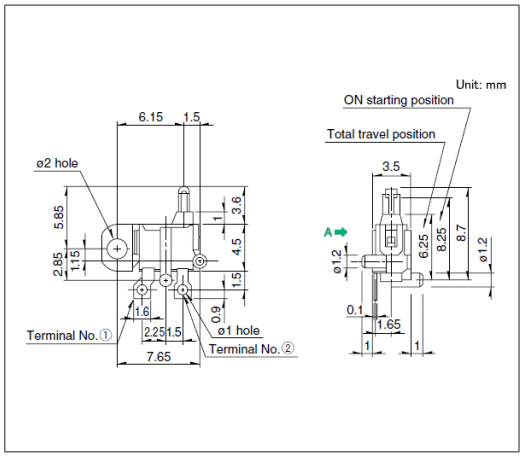

■ Mounting Hole Dimensions

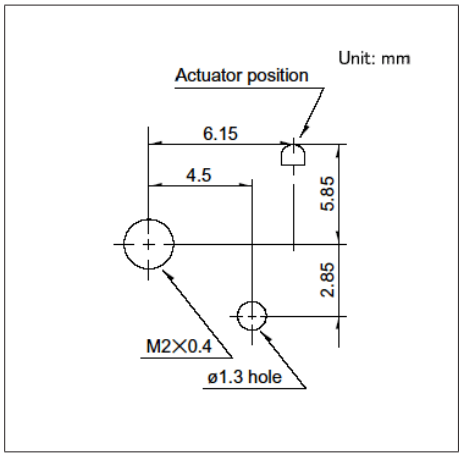

■ Circuit Diagram

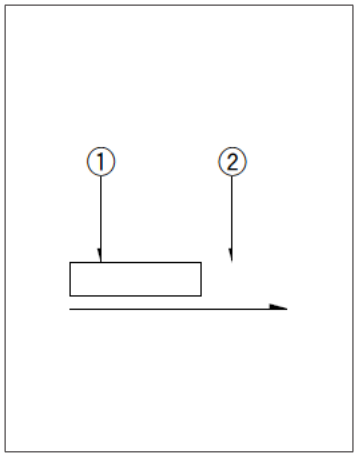

Viewed from direction A in the dimensions.

Drawing No.2

■ Dimensions

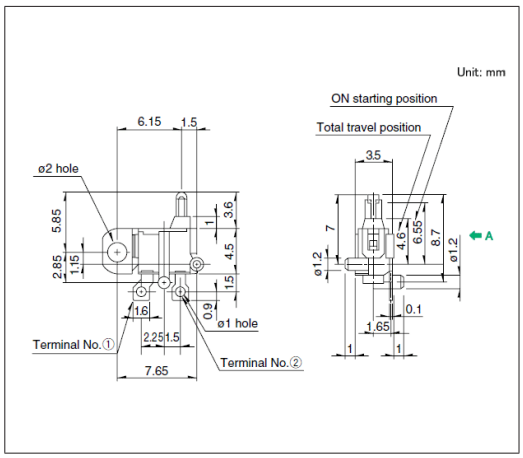

■ Mounting Hole Dimensions

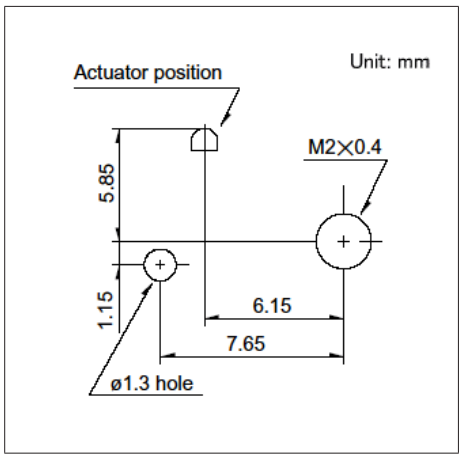

■ Circuit Diagram

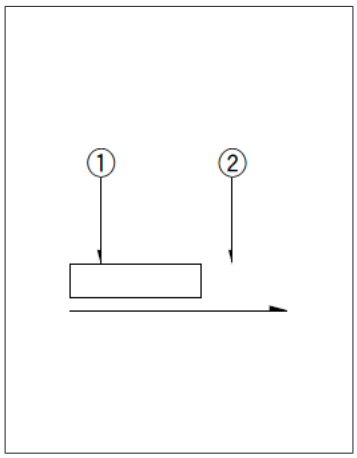

Viewed from direction A in the dimensions.

Drawing No.3

■ Dimensions

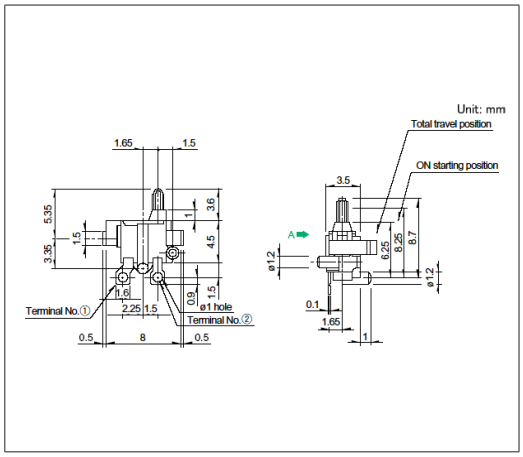

■ Mounting Hole Dimensions

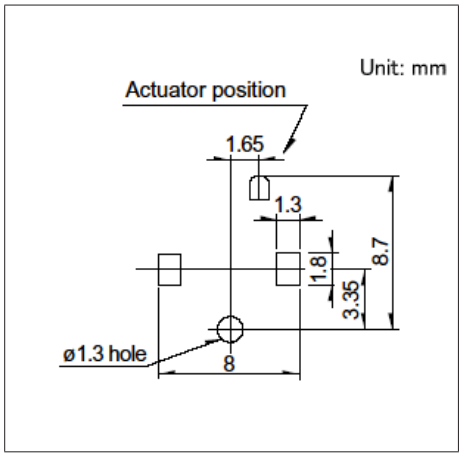

■ Circuit Diagram

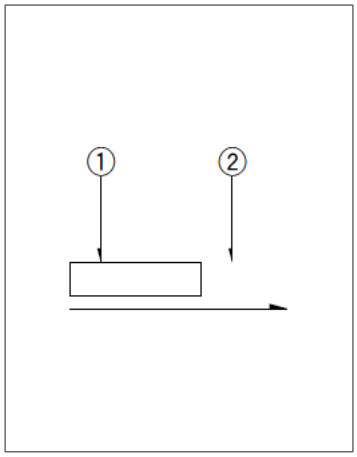

Viewed from direction A in the dimensions.

Drawing No.4

■ Dimensions

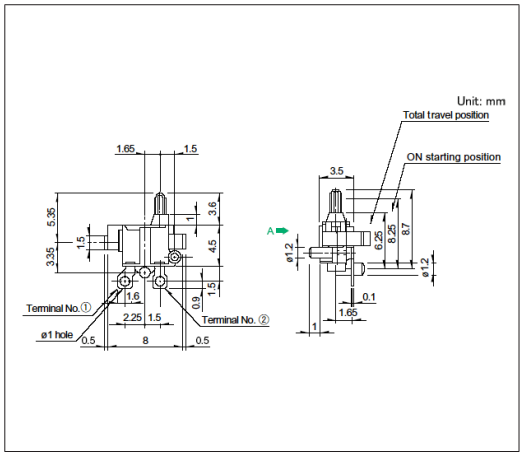

■ Mounting Hole Dimensions

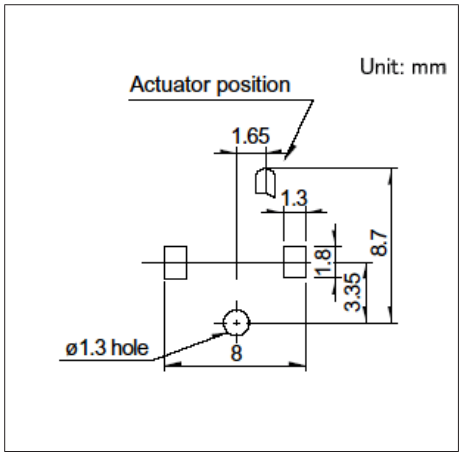

■ Circuit Diagram

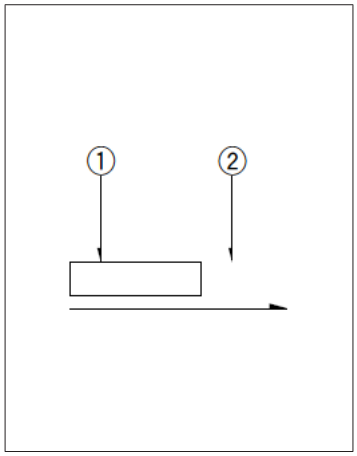

Viewed from direction A in the dimensions.

Drawing No.5

■ Dimensions

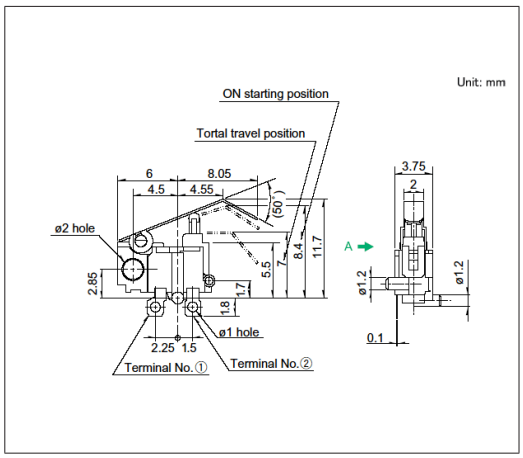

■ Mounting Hole Dimensions

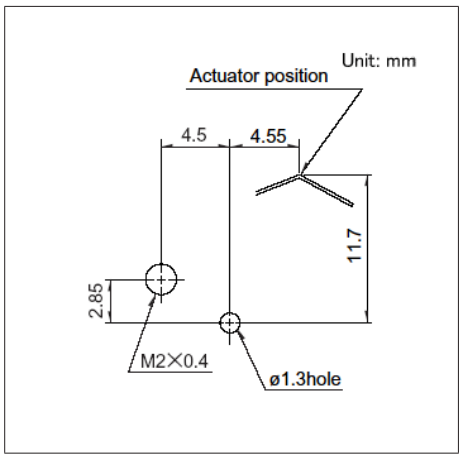

■ Circuit Diagram

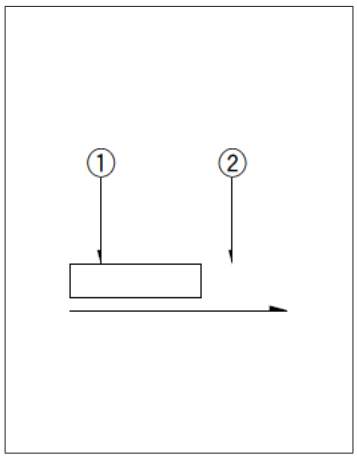

Viewed from direction A in the dimensions.

Drawing No.6

■ Dimensions

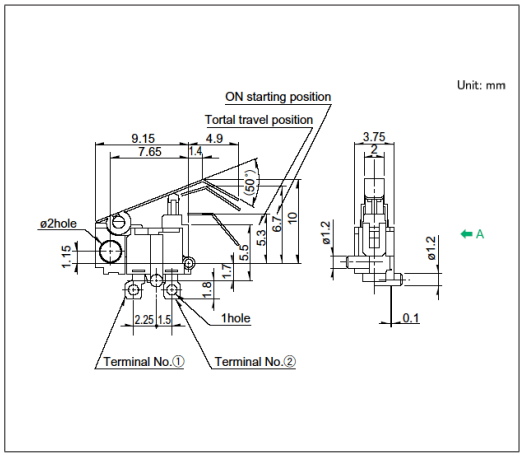

■ Mounting Hole Dimensions

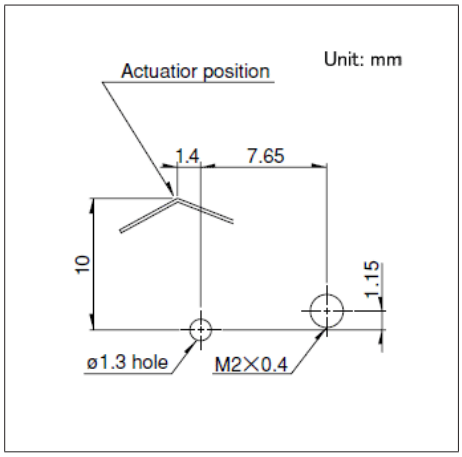

■ Circuit Diagram

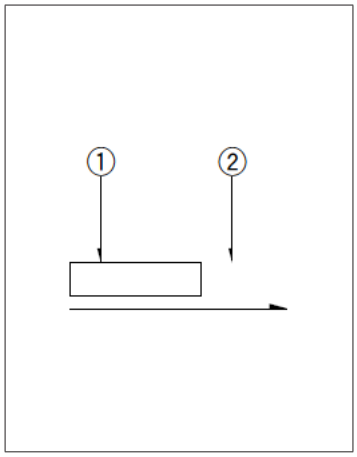

Viewed from direction A in the dimensions.

Drawing No.7

■ Dimensions

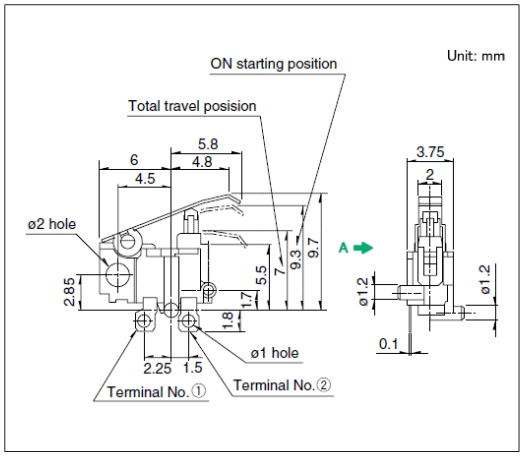

■ Mounting Hole Dimensions

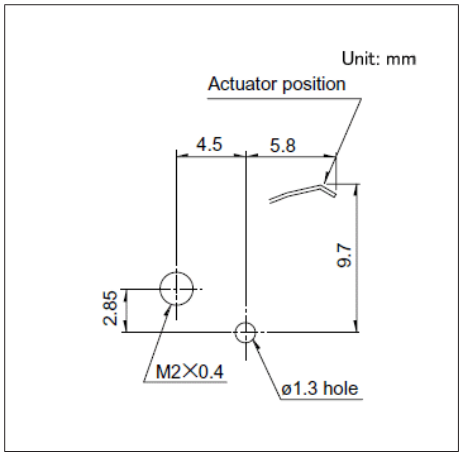

■ Circuit Diagram

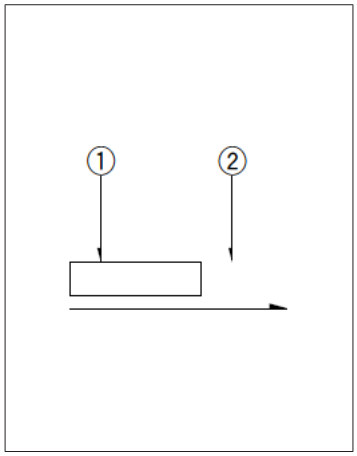

Viewed from direction A in the dimensions.

Drawing No.8

■ Dimensions

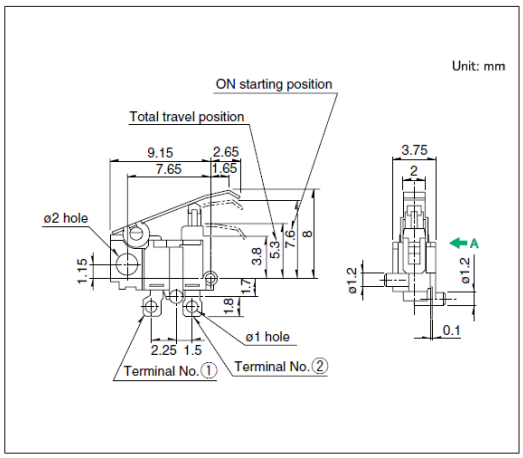

■ Mounting Hole Dimensions

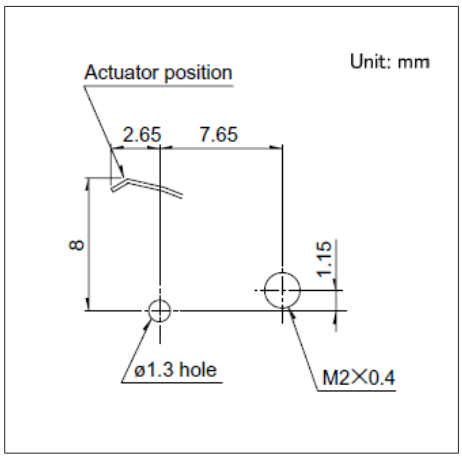

■ Circuit Diagram

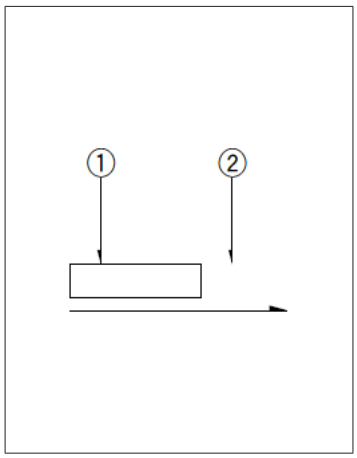

Viewed from direction A in the dimensions.

Drawing No.9

■ Dimensions

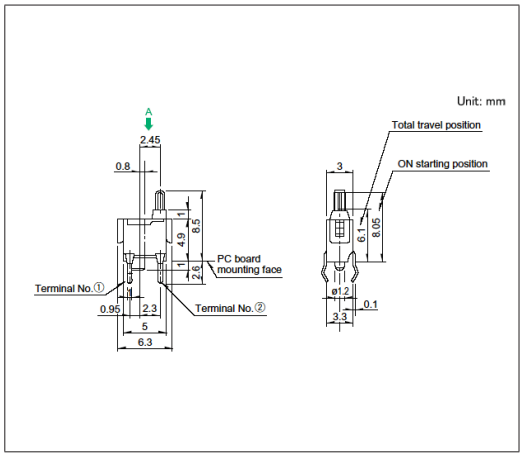

■ Mounting Hole Dimensions

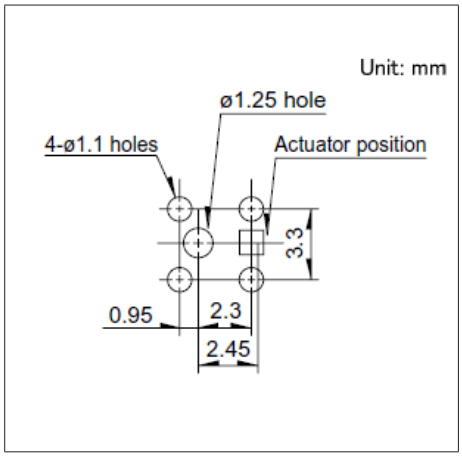

■ Circuit Diagram

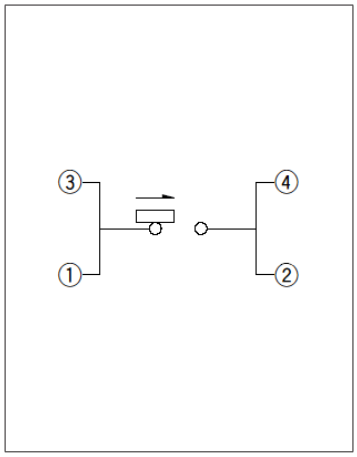

Viewed from direction A in the dimensions.

Drawing No.10

■ Dimensions

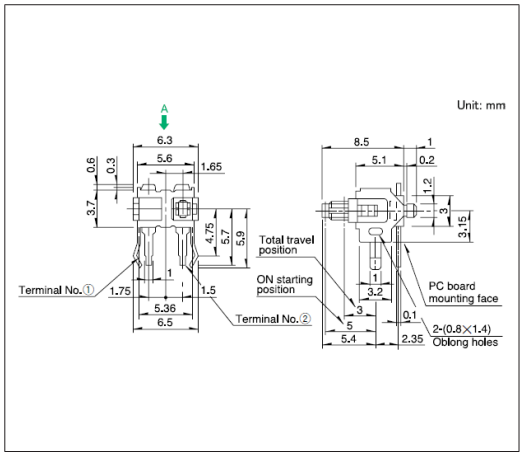

■ Mounting Hole Dimensions

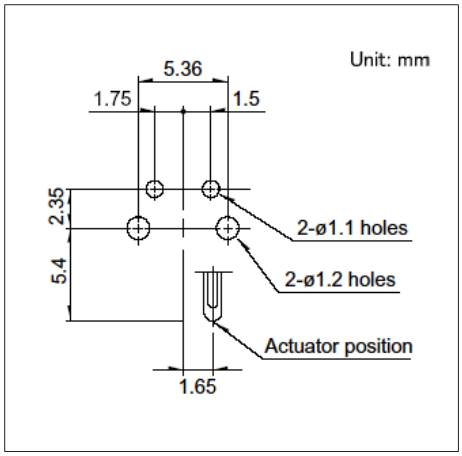

■ Circuit Diagram

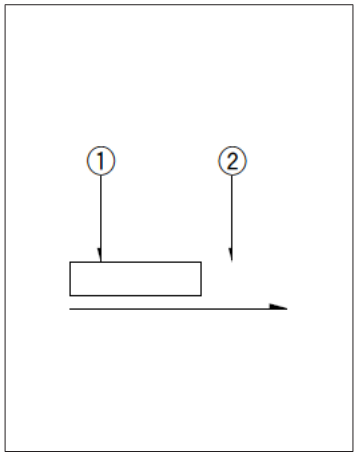

Viewed from direction A in the dimensions.

Drawing No.11

■ Dimensions

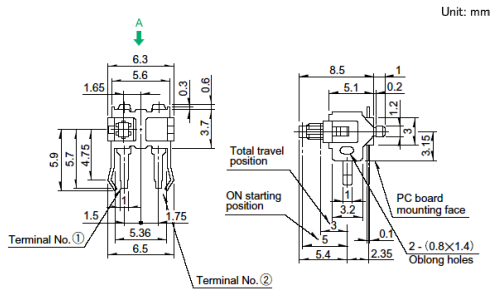

■ Mounting Hole Dimensions

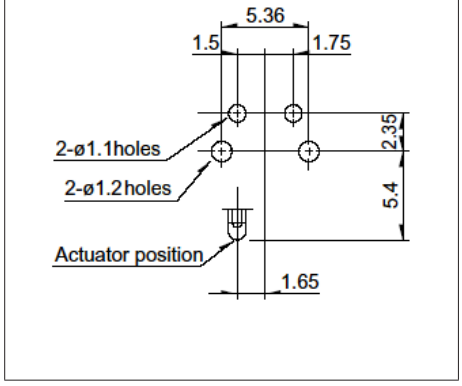

■ Circuit Diagram

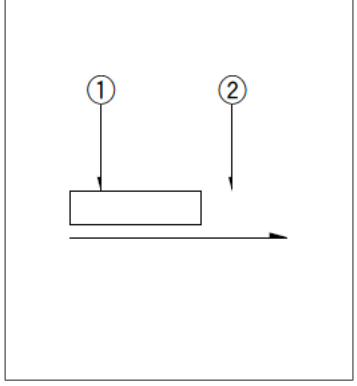

Viewed from direction A in the dimensions.

Drawing No.12

■ Dimensions

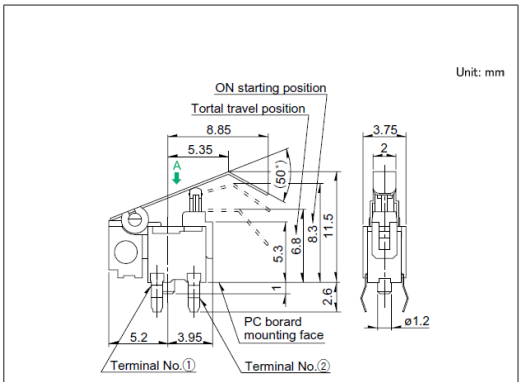

■ Mounting Hole Dimensions

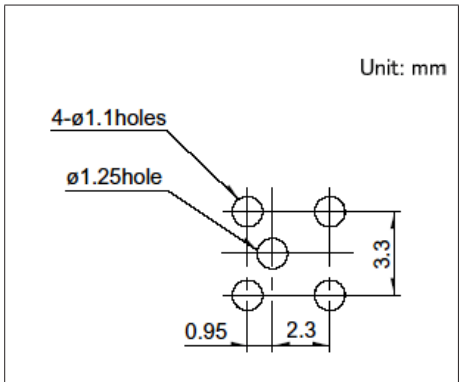

■ Circuit Diagram

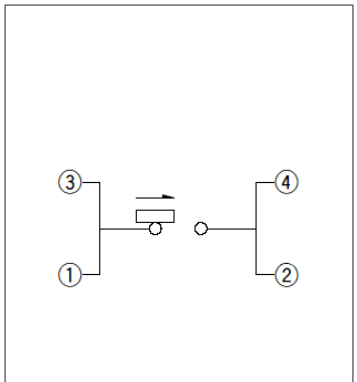

Viewed from direction A in the dimensions.

Drawing No.13

■ Dimensions

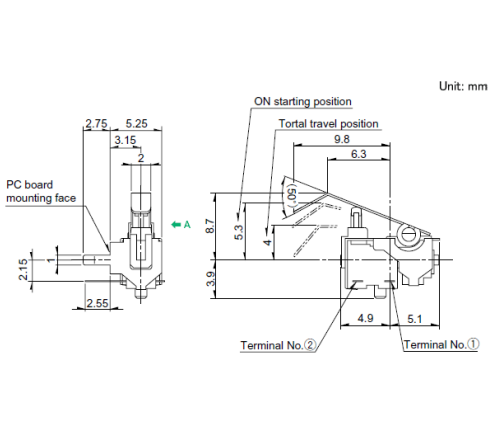

■ Mounting Hole Dimensions

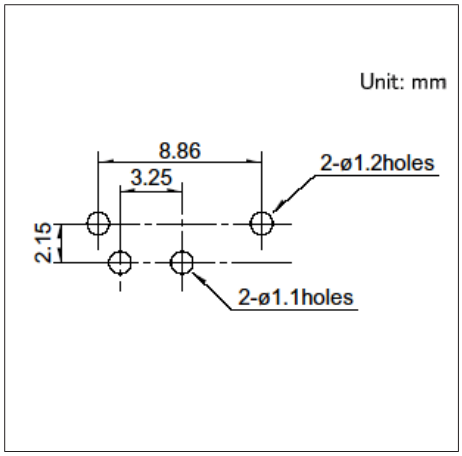

■ Circuit Diagram

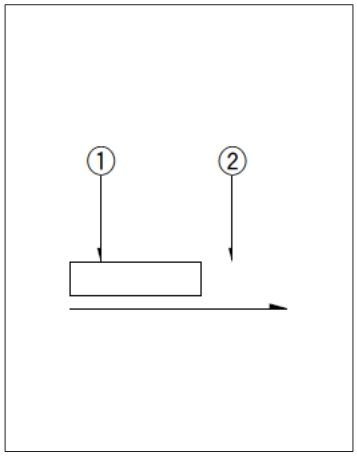

Viewed from direction A in the dimensions.

Drawing No.14

■ Dimensions

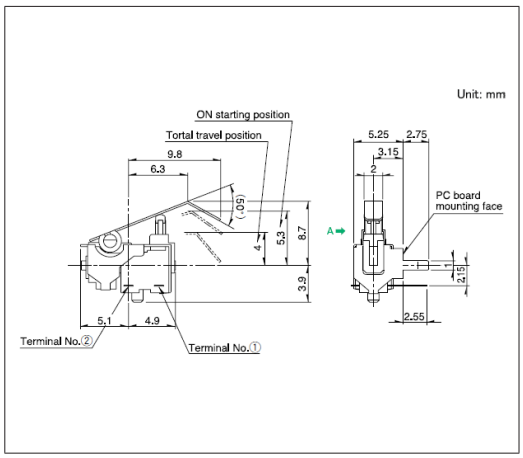

■ Mounting Hole Dimensions

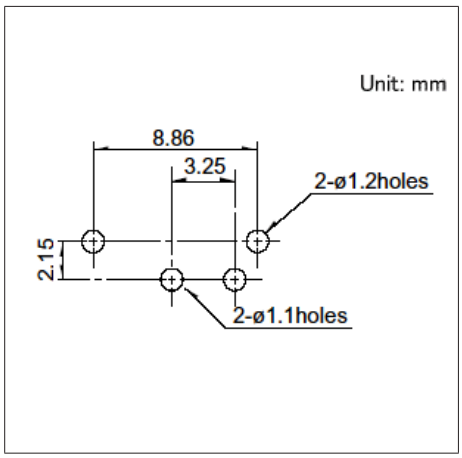

■ Circuit Diagram

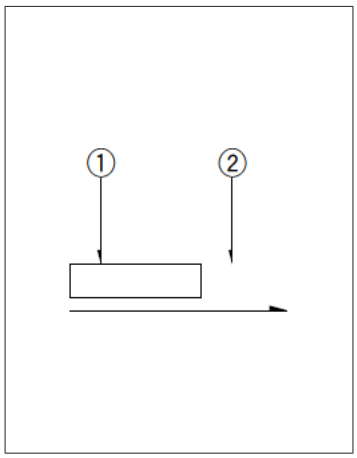

Viewed from direction A in the dimensions.

Drawing No.15

■ Dimensions

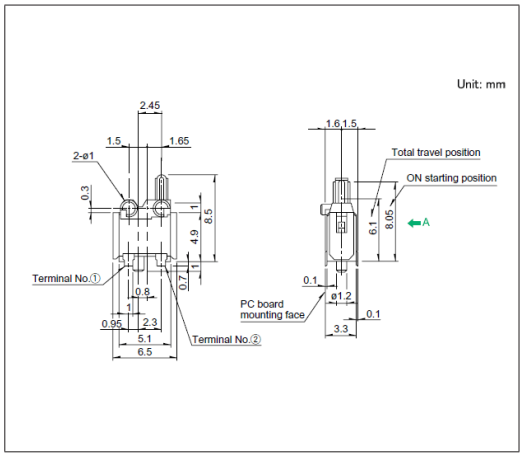

■ Land Dimensions

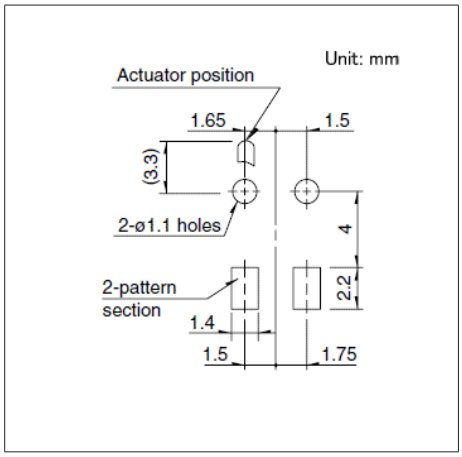

■ Circuit Diagram

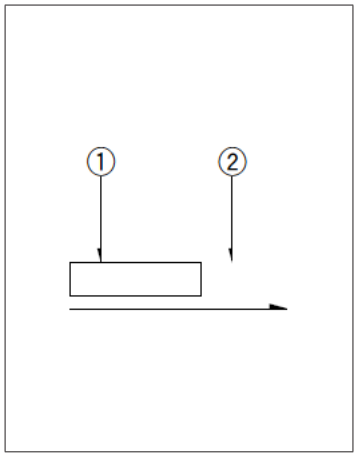

Viewed from direction A in the dimensions.

Drawing No.16

■ Dimensions

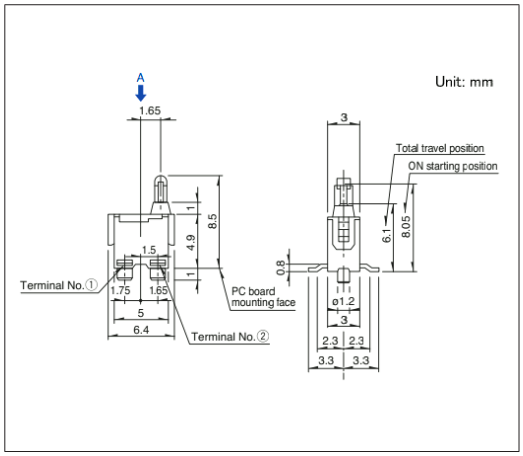

■ Land Dimensions

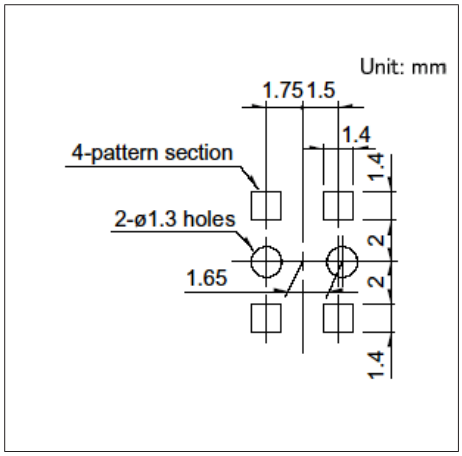

■ Circuit Diagram

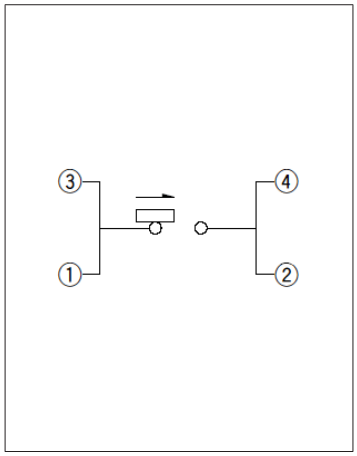

Viewed from direction A in the dimensions.

Drawing No.17

■ Dimensions

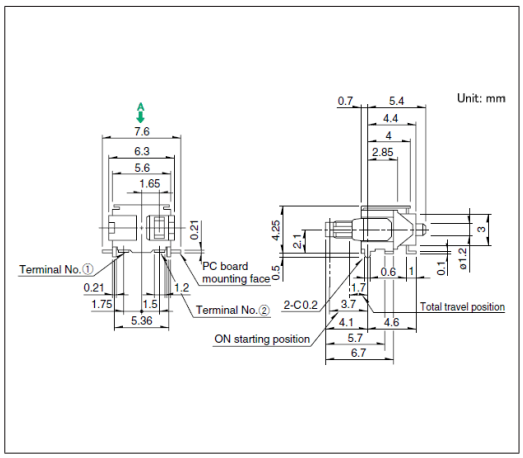

■ Land Dimensions

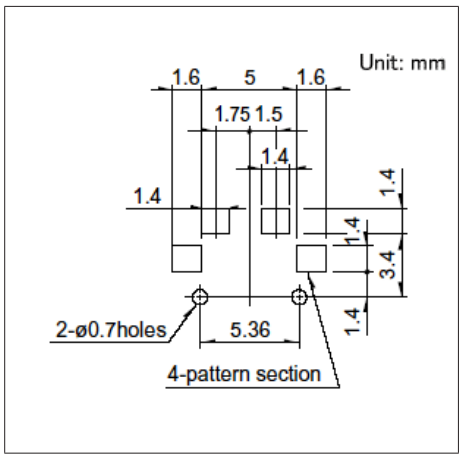

■ Circuit Diagram

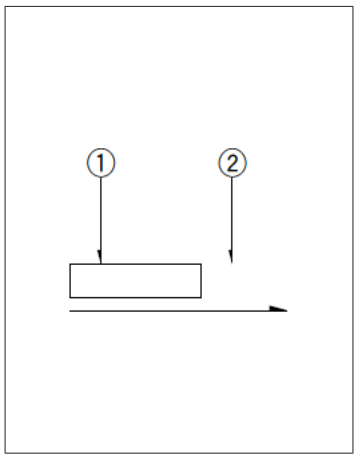

Viewed from direction A in the dimensions.

Drawing No.18

■ Dimensions

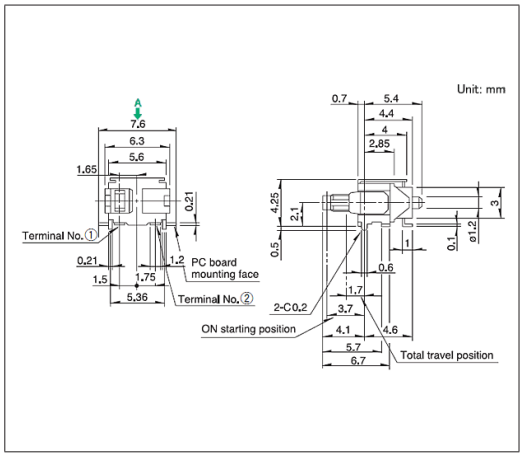

■ Land Dimensions

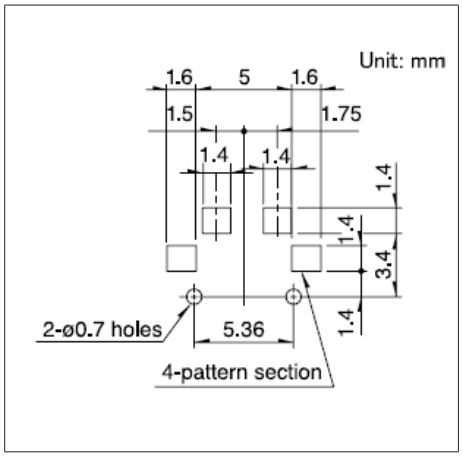

■ Circuit Diagram

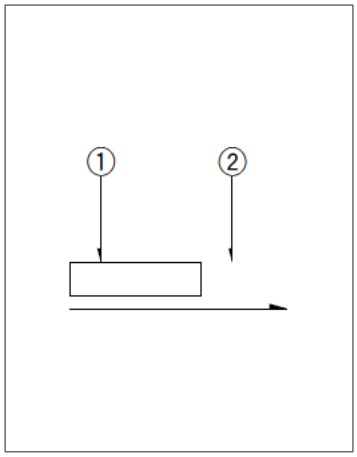

Viewed from direction A in the dimensions.

Micro Switch Type
SSCT Series

Micro switch type with printable or lead wiring, mountable on panels with screws.

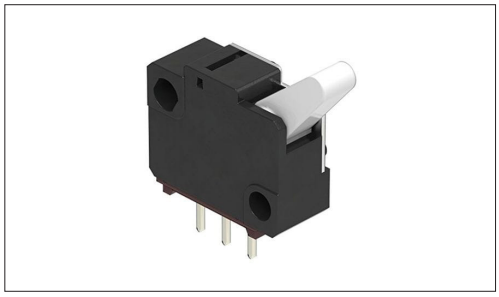

Automotive

- Rating(max.)/(min.)(Resistive load):0.1A 12V DC/50μA 3V DC
- Contact resistance(Initial/After operating life):200mΩ max./500mΩ max.
- Operating life without load:10,000 cycles
- Operating life with load Rating(max.)(Resistive load):
  10,000 cycles 500mΩ max.

Applications:Automotive:Hood Latch (Side/Rear/Door/Gear)

■ Product List

Products No.	Poles	Positions	Operating force	Changeover timing	Operation part shape	Terminal type	Dimensions (W×D×H) (mm)	Water-proof	Dust-proof	Automotive	Drawing No.
SSCTL10600	1	2	0.7±0.3N	Non shorting	Lever	For PC board	12.5×5.0×11.5	—	—	●	1
SSCTL10400	1	2	0.7±0.3N	Non shorting	Lever	For Lead	12.5×5.0×11.5	—	—	●	2

⚠Note

1. This catalog shows only outline specifications. When using the products, please obtain formal specifications for supply.
2. Please place purchase orders per minimum order unit (integer).
3. This products can be used in vehicles.
   Although these products are designed to perform over a wide operating temperature range, please ensure that you receive and read the formal delivery specifications before use.
4. For the Timing Lag Diagram and Terminal Style, please check our website.

■ Packing Specifications

Bulk

Number of packages(pcs.)		Export package measurements (mm)
1 case / Japan	1 case / export packing	
1,000	5,000	400 x 270 x 290

Drawing No.1

■ Dimensions

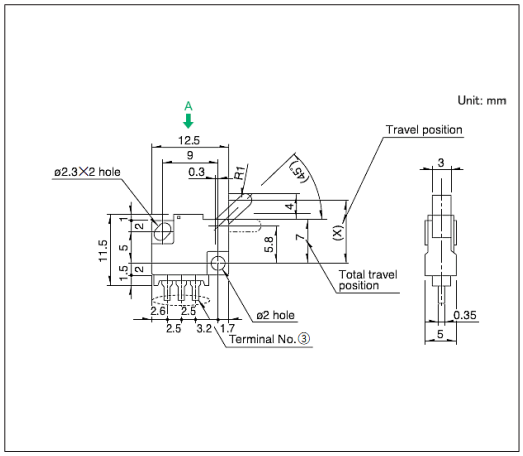

■ Mounting Hole Dimensions

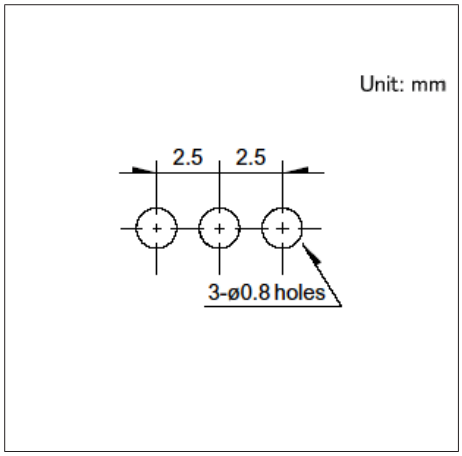

■ Circuit Diagram

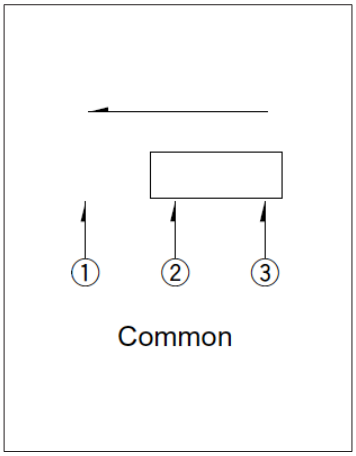

Viewed from direction A in the dimensions.

Drawing No.2

■ Dimensions

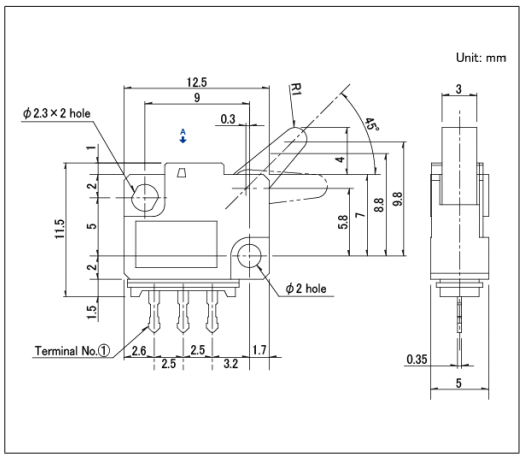

■ Circuit Diagram

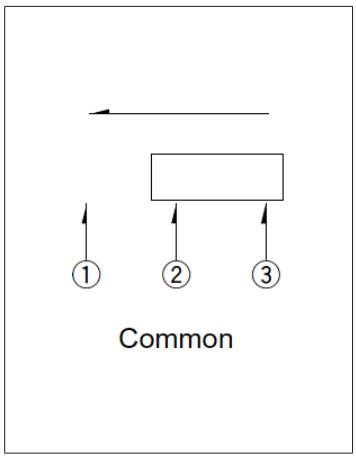

Two-way Detection
SSCF Series

Improved design freedom around set mechanisms with left-right detection capability.

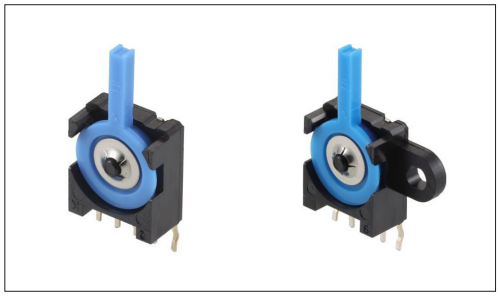

Automotive

- Rating(max.)/(min.)(Resistive load):0.1A 12V DC/50μA 3V DC
- Contact resistance(Initial/After operating life):100mΩ max./300mΩ max.
- Operating life without load:50,000 cycles
- Operating life with load Rating(max.)(Resistive load):
  50,000 cycles 300mΩ max.

Applications:Audio_TV:Audio
Automotive:Hood Latch (Side/Rear/Door/Gear)

■ Product List

Products No.	Poles	Positions	Operating force	Changeover timing	Terminal type	Dimensions (W×D×H) (mm)	Water-proof	Dust-proof	Automotive	Drawing No.
SSCF110100	1	2	0.7N max.	Non shorting	For PC board	11.0×5.8×12.4	—	—	●	1
SSCF210100	1	2	0.7N max.	Non shorting	For PC board	15.5×5.8×12.4	—	—	●	2
SSCF210300	1	2	0.7N max.	Non shorting	For Lead	15.5×5.8×12.4	—	—	●	3
SSCF310100	1	2	0.7N max.	Non shorting	For PC board	11.0×5.8×12.4	—	—	●	4

⚠Note

1. This catalog shows only outline specifications. When using the products, please obtain formal specifications for supply.
2. Please place purchase orders per minimum order unit (integer).
3. This products can be used in vehicles.
   Although these products are designed to perform over a wide operating temperature range, please ensure that you receive and read the formal delivery specifications before use.
4. For the Terminal Style, please check our website.

■ Packing Specifications

Bulk

Number of packages(pcs.)		Export package measurements (mm)
1 case / Japan	1 case / export packing	
600	3,000	400 x 270 x 290

Drawing No.1

■ Dimensions

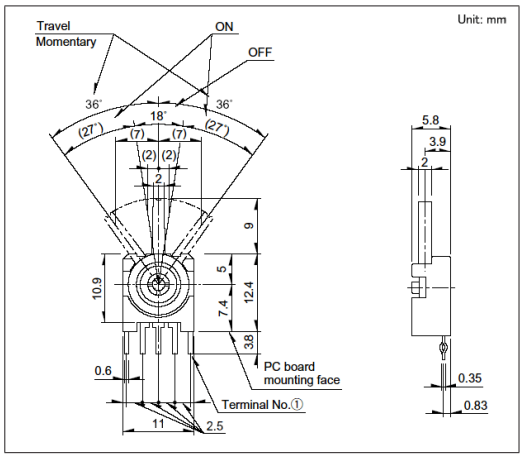

■ Mounting Hole Dimensions

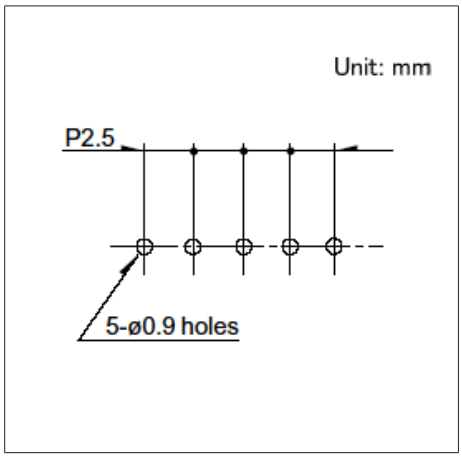

■ Circuit Diagram

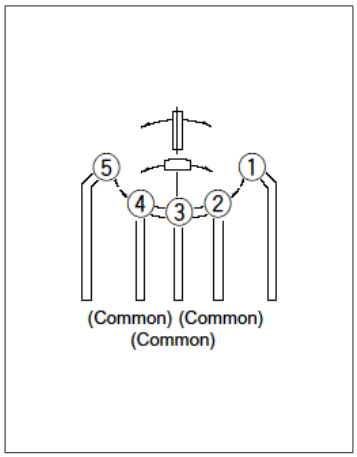

Drawing No.2

■ Dimensions

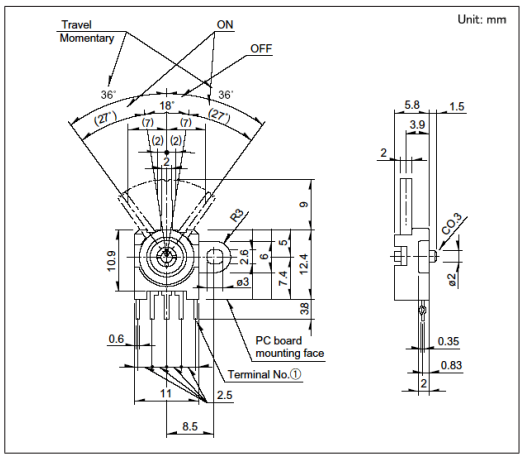

■ Circuit Diagram

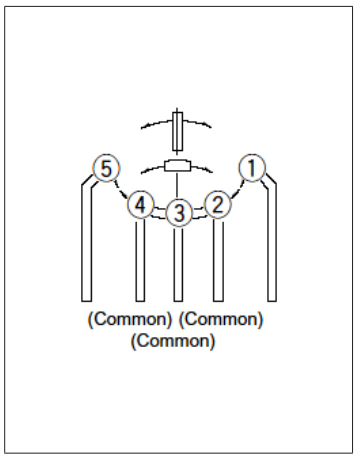

Drawing No.3

■ Dimensions

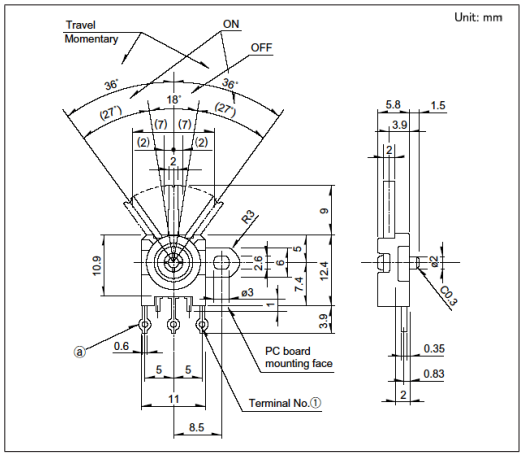

■ Circuit Diagram

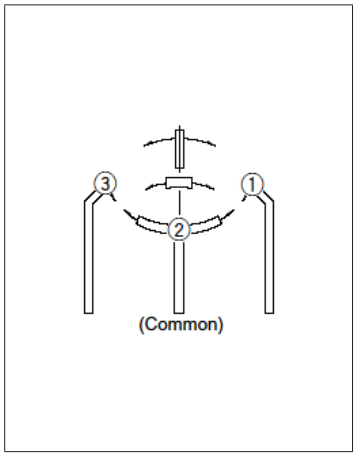

Drawing No.4

■ Dimensions

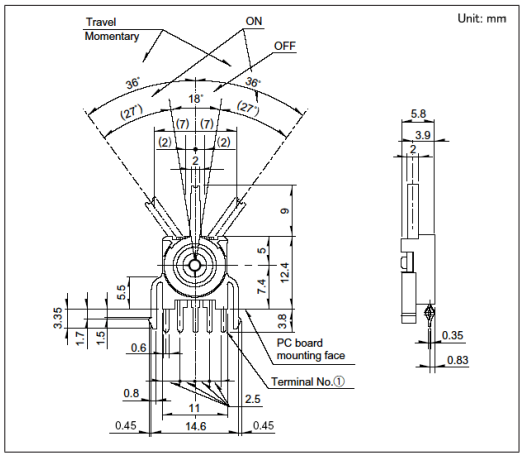

■ Mounting Hole Dimensions

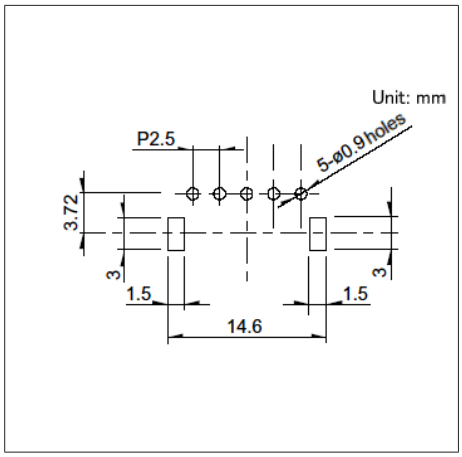

■ Circuit Diagram

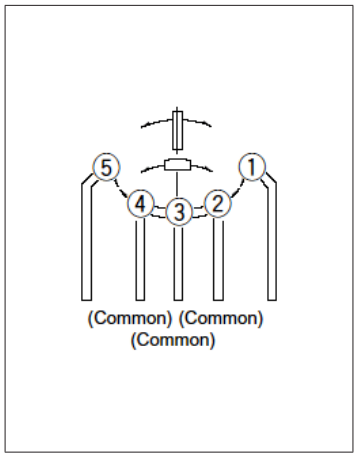

Two-way Operation with Female Connector Terminal

SSCW Series

Single-circuit, single-contact design with connector connection, eliminating soldering.

Automotive

- Rating(max.)/(min.)(Resistive load):0.1A 12V DC/100μA 3V DC
- Contact resistance(Initial/After operating life):500mΩ max./1Ω max.
- Operating life without load:100,000 cycles
- Operating life with load Rating(max.)(Resistive load):
  100,000 cycles 1Ω max.

Applications:Energy_Industrial:Robots, drones,Industrial equipment
Home:Major home appliances
Automotive:Hood Latch (Side/Rear/Door/Gear)

■ Product List

Products No.	Poles	Positions	Operating force	Terminal type	Dimensions (W×D×H) (mm)	Water-proof	Dust-proof	Automotive	Drawing No.
SSCW110102	1	1	1N max.	Female connector type	5.3×13.1×11.35	—	—	●	1

⚠Note

1. This catalog shows only outline specifications. When using the products, please obtain formal specifications for supply.
2. Please place purchase orders per minimum order unit (integer).
3. This products can be used in vehicles.
   Although these products are designed to perform over a wide operating temperature range, please ensure that you receive and read the formal delivery specifications before use.

■ Packing Specifications

Bulk

Number of packages(pcs.)		Export package measurements (mm)
1 case / Japan	1 case / export packing	
2,000	10,000	389 x 276 x 380

Drawing No.1

■ Dimensions

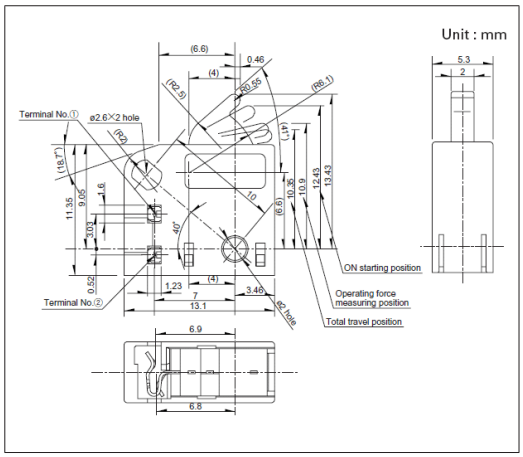

■ Recommended Unit Terminal style

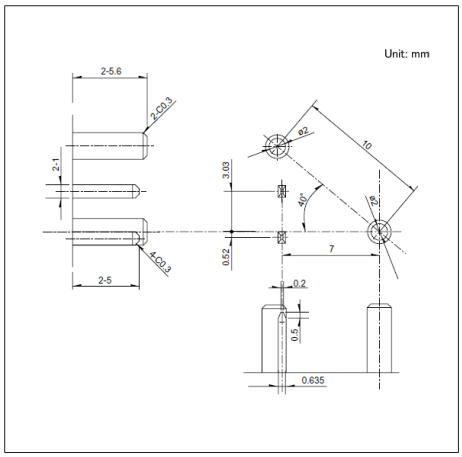

■ Circuit Diagram

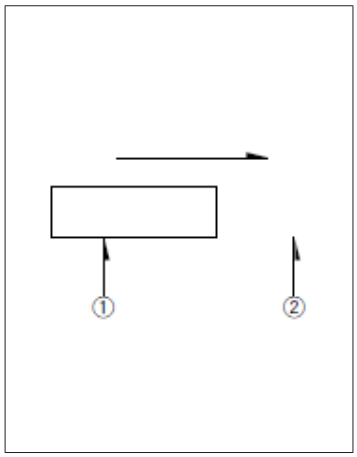

Two-way Detection with Female Connector Terminal

SSCL Series

One-touch connection with female connector terminals, achieving solderless assembly.

Automotive

- Rating(max.)/(min.)(Resistive load):0.1A 12V DC/50μA 5V DC
- Contact resistance(Initial/After operating life):500mΩ max./1Ω max.
- Operating life without load:50,000 cycles
- Operating life with load Rating(max.)(Resistive load):
  50,000 cycles 1Ω max.

Applications:Automotive:Hood Latch (Side/Rear/Door/Gear)

■ Product List

Products No.	Poles	Positions	Operating force	Terminal type	Dimensions (W×D×H) (mm)	Water-proof	Dust-proof	Automotive	Drawing No.
SSCL110101	1	2	0.7N max.	Female connector type	5.3×11.0×16.1	—	—	●	1

⚠Note

1. This catalog shows only outline specifications. When using the products, please obtain formal specifications for supply.
2. Please place purchase orders per minimum order unit (integer).
3. This products can be used in vehicles.
   Although these products are designed to perform over a wide operating temperature range, please ensure that you receive and read the formal delivery specifications before use.

■ Packing Specifications

Bulk

Number of packages(pcs.)		Export package measurements (mm)
1 case / Japan	1 case / export packing	
1,000	5,000	400 x 270 x 290

Drawing No.1

■ Dimensions

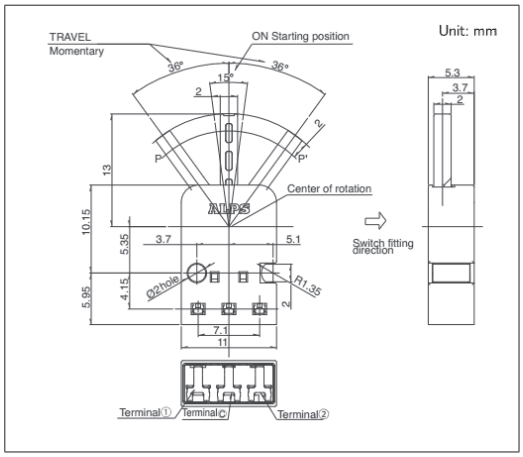

■ Recommended Unit Terminal style

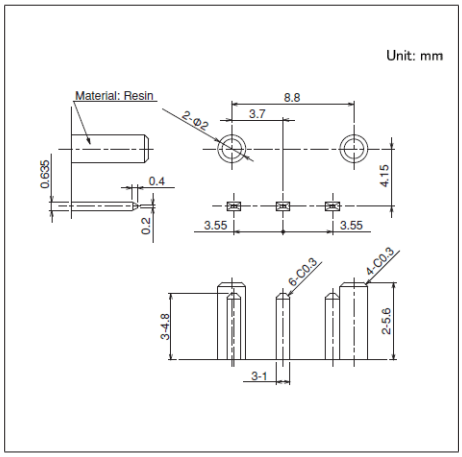

■ Circuit Diagram

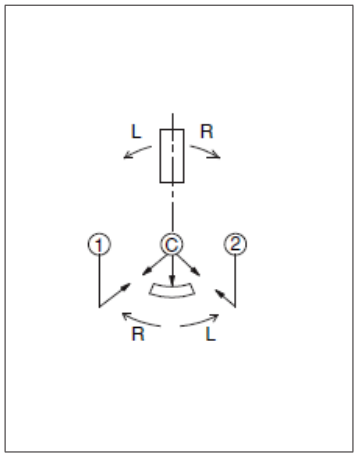

With Connector Terminal Two-way Operation

SSCZ Series

Connector connection eliminates the need for soldering.

Automotive

- Rating(max.)/(min.)(Resistive load):0.1A 16V DC/100μA 3V DC
- Contact resistance(Initial/After operating life):500mΩ max./1Ω max.
- Operating life without load:300,000 cycles
- Operating life with load Rating(max.)(Resistive load):
  300,000 cycles 1Ω max.

Applications:Automotive:Hood Latch (Side/Rear/Door/Gear)

■ Product List

Products No.	Poles	Positions	Operating force	Terminal type	Dimensions (W×D×H) (mm)	Water-proof	Dust-proof	Automotive	Drawing No.
SSCZ110101	1	2	1.1N max.	Connector type	13.84×5.4×15.4	—	—	●	1

Note

1. This catalog shows only outline specifications. When using the products, please obtain formal specifications for supply.
2. Please place purchase orders per minimum order unit (integer).
3. This products can be used in vehicles.
   Although these products are designed to perform over a wide operating temperature range, please ensure that you receive and read the formal delivery specifications before use.

■ Packing Specifications

Bulk

Number of packages(pcs.)		Export package measurements (mm)
1 case / Japan	1 case / export packing	
1,200	6,000	389 x 276 x 380

Drawing No.1

■ Dimensions

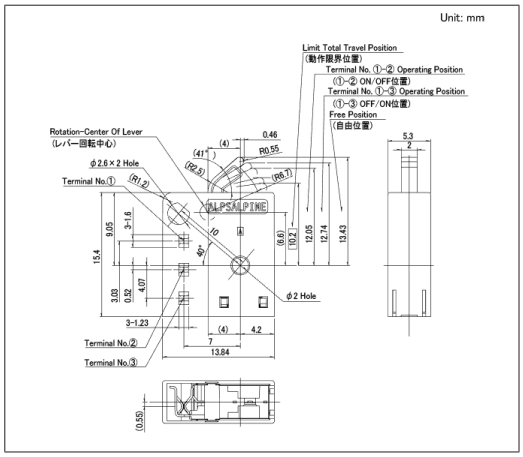

■ Recommended Unit Terminal style

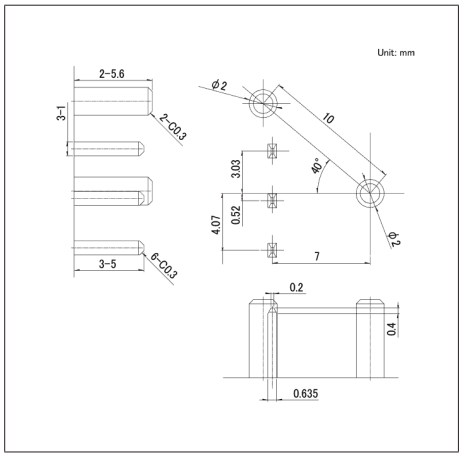

■ Circuit Diagram

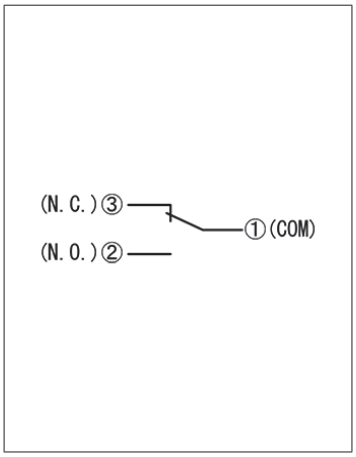

Water-proof Type
SPVQ3 Series

Wide product variety including long-stroke types pressable diagonally without an actuator.

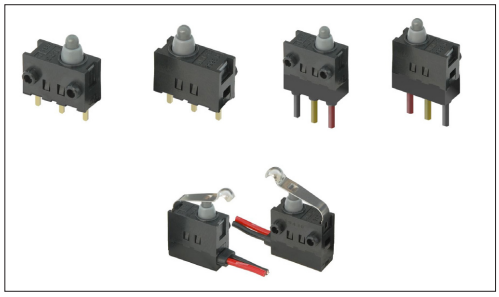

Automotive | Water-proof Type | Dust-proof Type

- Rating(max.)/(min.)(Resistive load):0.1A 12V DC/50μA 5V DC
- Contact resistance(Initial/After operating life):500mΩ max./1Ω max.
- Operating life without load:300,000 cycles
- Operating life with load Rating(max.)(Resistive load):
  300,000 cycles 1Ω max.

Applications:Energy_Industrial:Robots, drones,Industrial equipment
Home:Major home appliances
Automotive:Hood Latch (Side/Rear/Door/Gear)

■ Product List

Products No.	Poles	Positions	Operating force	Changeover timing	Operation part shape	Terminal type	Main body form	Dimensions (W×D×H) (mm)	Water-proof	Dust-proof	Automotive	Drawing No.
SPVQ380400	1	2	1±0.5N	Non shorting	Push	For PC board	Without boss	5.3×13.0×8.35	●	●	●	1
SPVQ380300	1	2	1±0.5N	Non shorting	Push	For PC board	Boss - right side	5.3×13.0×8.35	●	●	●	2
SPVQ380201	1	2	1±0.5N	Non shorting	Push	For PC board	Boss - left side	5.3×13.0×8.35	●	●	●	3
SPVQ380100	1	2	1±0.5N	Non shorting	Push	For PC board	Boss - both sides	5.3×13.0×8.35	●	●	●	4
SPVQ380700	1	2	1±0.5N	Non shorting	Push	For Lead	Boss - right side	5.3×13.0×8.35	●	●	●	5
SPVQ380600	1	2	1±0.5N	Non shorting	Push	For Lead	Boss - left side	5.3×13.0×8.35	●	●	●	6
SPVQ380500	1	2	1±0.5N	Non shorting	Push	For Lead	Boss - both sides	5.3×13.0×8.35	●	●	●	7
SPVQ380900	1	2	1±0.5N	Non shorting	Push	Angle (Right)	Boss - right side	5.3×13.0×8.35	●	●	●	8
SPVQ380800	1	2	1±0.5N	Non shorting	Push	Angle (Left)	Boss - left side	5.3×13.0×8.35	●	●	●	9
SPVQ361000	1	2	1±0.5N	Non shorting	Push	With wire (Downwards)	With a screw hole	5.3×13.0×8.35	●	●	●	10
SPVQ361100	1	2	1±0.5N	Non shorting	Push	With wire (Downwards)	Boss - right side	5.3×13.0×8.35	●	●	●	11
SPVQ361200	1	2	1±0.5N	Non shorting	Push	With wire (Downwards)	Boss - left side	5.3×13.0×8.35	●	●	●	12
SPVQ361300	1	2	1±0.5N	Non shorting	Push	With wire (Downwards)	Boss - both sides	5.3×13.0×8.35	●	●	●	13
SPVQ361400	1	1	1±0.5N	Non shorting	Push	With wire (Right side)	With a screw hole	5.3×13.0×8.35	●	●	●	14
SPVQ361500	1	1	1±0.5N	Non shorting	Push	With wire (Right side)	Boss - right side	5.3×13.0×8.35	●	●	●	15
SPVQ361600	1	1	1±0.5N	Non shorting	Push	With wire (Right side)	Boss - left side	5.3×13.0×8.35	●	●	●	16
SPVQ361700	1	1	1±0.5N	Non shorting	Push	With wire (Right side)	Boss - both sides	5.3×13.0×8.35	●	●	●	17
SPVQ361800	1	1	1±0.5N	Non shorting	Push	With wire (Left side)	Boss - right side	5.3×13.0×8.35	●	●	●	18
SPVQ361900	1	1	1±0.5N	Non shorting	Push	With wire (Left side)	Boss - left side	5.3×13.0×8.35	●	●	●	19
SPVQ362000	1	1	1±0.5N	Non shorting	Push	With wire (Left side)	Boss - both sides	5.3×13.0×8.35	●	●	●	20
SPVQ370400	1	2	3N max.	Non shorting	Actuator A	For PC board	Without boss	5.3×13.0×8.35	●	●	●	21
SPVQ370300	1	2	3N max.	Non shorting	Actuator A	For PC board	Boss - right side	5.3×13.0×8.35	●	●	●	22
SPVQ370200	1	2	3N max.	Non shorting	Actuator A	For PC board	Boss - left side	5.3×13.0×8.35	●	●	●	23
SPVQ370100	1	2	3N max.	Non shorting	Actuator A	For PC board	Boss - both sides	5.3×13.0×8.35	●	●	●	24

Water-proof Type

SPVQ3 Series

Products No.	Poles	Positions	Operating force	Changeover timing	Operation part shape	Terminal type	Main body form	Dimensions (W×D×H) (mm)	Water-proof	Dust-proof	Automotive	Drawing No.
SPVQ370700	1	2	3N max.	Non shorting	Actuator A	For Lead	Boss - right side	5.3×13.0×8.35	●	●	●	25
SPVQ370600	1	2	3N max.	Non shorting	Actuator A	For Lead	Boss - left side	5.3×13.0×8.35	●	●	●	26
SPVQ370500	1	2	3N max.	Non shorting	Actuator A	For Lead	Boss - both sides	5.3×13.0×8.35	●	●	●	27
SPVQ370900	1	2	3N max.	Non shorting	Actuator A	Angle (Right)	Boss - right side	5.3×13.0×8.35	●	●	●	28
SPVQ370800	1	2	3N max.	Non shorting	Actuator A	Angle (Left)	Boss - left side	5.3×13.0×8.35	●	●	●	29
SPVQ350100	1	2	3N max.	Non shorting	Actuator A	With wire (Downwards)	With a screw hole	5.3×13.0×8.35	●	●	●	30
SPVQ350200	1	2	3N max.	Non shorting	Actuator A	With wire (Downwards)	Boss - right side	5.3×13.0×8.35	●	●	●	31
SPVQ350300	1	2	3N max.	Non shorting	Actuator A	With wire (Downwards)	Boss - left side	5.3×13.0×8.35	●	●	●	32
SPVQ350400	1	2	3N max.	Non shorting	Actuator A	With wire (Downwards)	Boss - both sides	5.3×13.0×8.35	●	●	●	33
SPVQ350600	1	1	3N max.	Non shorting	Actuator A	With wire (Right side)	Boss - right side	5.3×13.0×8.35	●	●	●	34
SPVQ350700	1	1	3N max.	Non shorting	Actuator A	With wire (Right side)	Boss - left side	5.3×13.0×8.35	●	●	●	35
SPVQ350800	1	1	3N max.	Non shorting	Actuator A	With wire (Right side)	Boss - both sides	5.3×13.0×8.35	●	●	●	36
SPVQ350900	1	1	3N max.	Non shorting	Actuator A	With wire (Left side)	Boss - right side	5.3×13.0×8.35	●	●	●	37
SPVQ351000	1	1	3N max.	Non shorting	Actuator A	With wire (Left side)	Boss - left side	5.3×13.0×8.35	●	●	●	38
SPVQ351100	1	1	3N max.	Non shorting	Actuator A	With wire (Left side)	Boss - both sides	5.3×13.0×8.35	●	●	●	39
SPVQ371300	1	2	3N max.	Non shorting	Actuator B	For PC board	Without boss	5.3×13.0×8.35	●	●	●	40
SPVQ371200	1	2	3N max.	Non shorting	Actuator B	For PC board	Boss - right side	5.3×13.0×8.35	●	●	●	41
SPVQ371100	1	2	3N max.	Non shorting	Actuator B	For PC board	Boss - left side	5.3×13.0×8.35	●	●	●	42
SPVQ371000	1	2	3N max.	Non shorting	Actuator B	For PC board	Boss - both sides	5.3×13.0×8.35	●	●	●	43
SPVQ371600	1	2	3N max.	Non shorting	Actuator B	For Lead	Boss - right side	5.3×13.0×8.35	●	●	●	44
SPVQ371500	1	2	3N max.	Non shorting	Actuator B	For Lead	Boss - left side	5.3×13.0×8.35	●	●	●	45
SPVQ371400	1	2	3N max.	Non shorting	Actuator B	For Lead	Boss - both sides	5.3×13.0×8.35	●	●	●	46
SPVQ371800	1	2	3N max.	Non shorting	Actuator B	Angle (Right)	Boss - right side	5.3×13.0×8.35	●	●	●	47
SPVQ371700	1	2	3N max.	Non shorting	Actuator B	Angle (Left)	Boss - left side	5.3×13.0×8.35	●	●	●	48
SPVQ351200	1	2	3N max.	Non shorting	Actuator B	With wire (Downwards)	With a screw hole	5.3×13.0×8.35	●	●	●	49
SPVQ351300	1	2	3N max.	Non shorting	Actuator B	With wire (Downwards)	Boss - right side	5.3×13.0×8.35	●	●	●	50
SPVQ351400	1	2	3N max.	Non shorting	Actuator B	With wire (Downwards)	Boss - left side	5.3×13.0×8.35	●	●	●	51
SPVQ351500	1	2	3N max.	Non shorting	Actuator B	With wire (Downwards)	Boss - both sides	5.3×13.0×8.35	●	●	●	52
SPVQ351700	1	1	3N max.	Non shorting	Actuator B	With wire (Right side)	Boss - right side	5.3×13.0×8.35	●	●	●	53
SPVQ351800	1	1	3N max.	Non shorting	Actuator B	With wire (Right side)	Boss - left side	5.3×13.0×8.35	●	●	●	54
SPVQ351900	1	1	3N max.	Non shorting	Actuator B	With wire (Right side)	Boss - both sides	5.3×13.0×8.35	●	●	●	55
SPVQ352000	1	1	3N max.	Non shorting	Actuator B	With wire (Left side)	Boss - right side	5.3×13.0×8.35	●	●	●	56
SPVQ352100	1	1	3N max.	Non shorting	Actuator B	With wire (Left side)	Boss - left side	5.3×13.0×8.35	●	●	●	57
SPVQ352200	1	1	3N max.	Non shorting	Actuator B	With wire (Left side)	Boss - both sides	5.3×13.0×8.35	●	●	●	58

Water-proof Type

SPVQ3 Series

⚠Note

1. This catalog shows only outline specifications. When using the products, please obtain formal specifications for supply.
2. Unless specified, the length of the lead wire is 250mm. Color is either Red, Black or Yellow. For length modification, please contact us.
3. This unit cannnot be used in water (IP6K7 rating, except for terminal).
4. Unless circuit is specified, wired (downward) types will apply three wires.
5. Please specify circuit (N. O. or N. C.) for wired (side) types. Unless specified, the circuit will apply N. O.
6. Please place purchase orders per minimum order unit (integer).
7. This products can be used in vehicles.
   Although these products are designed to perform over a wide operating temperature range, please ensure that you receive and read the formal delivery specifications before use.

■ Packing Specifications

Tray

Products No.	Number of packages(pcs.)		Export package measurements (mm)
	1 case / Japan	1 case / export packing	
SPVQ380400 SPVQ380300 SPVQ380201 SPVQ380100 SPVQ380700 SPVQ380600 SPVQ380500 SPVQ380900 SPVQ380800 SPVQ370400 SPVQ370300 SPVQ370200 SPVQ370100 SPVQ370700 SPVQ370600 SPVQ370500 SPVQ370900 SPVQ370800 SPVQ371300 SPVQ371200 SPVQ371100 SPVQ371000 SPVQ371600 SPVQ371500 SPVQ371400 SPVQ371800 SPVQ371700	1,300	5,200	540 x 360 x 290

Bulk

Products No.	Number of packages(pcs.)		Export package measurements (mm)
	1 case / Japan	1 case / export packing	
SPVQ361000 SPVQ361100 SPVQ361200 SPVQ361300 SPVQ361400 SPVQ361500 SPVQ361600 SPVQ361700 SPVQ361800 SPVQ361900 SPVQ362000	400	1,600	555 x 375 x 223
SPVQ350100 SPVQ350200 SPVQ350300 SPVQ350400 SPVQ351200 SPVQ351300 SPVQ351400 SPVQ351500	180	720	540 x 360 x 270
SPVQ350600 SPVQ350700 SPVQ350800 SPVQ350900 SPVQ351000 SPVQ351100 SPVQ351700 SPVQ351800 SPVQ351900 SPVQ352000 SPVQ352100 SPVQ352200	168	672	555 x 375 x 223

Water-proof Type

SPVQ3 Series

Drawing No.1

■ Dimensions

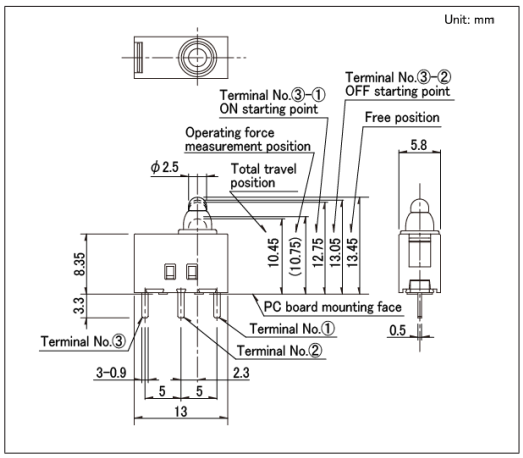

■ Circuit Diagram

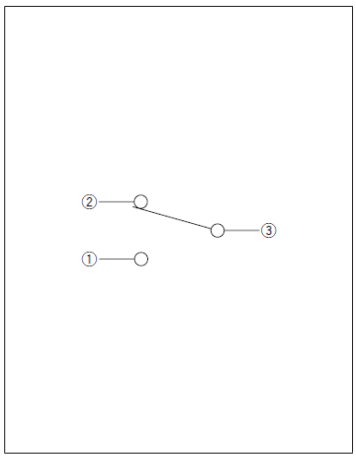

Drawing No.2

■ Dimensions

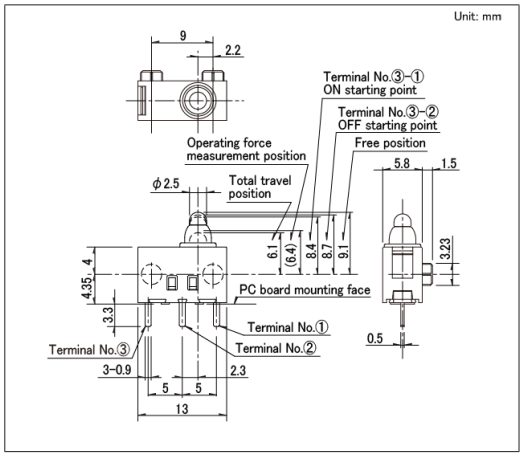

■ Circuit Diagram

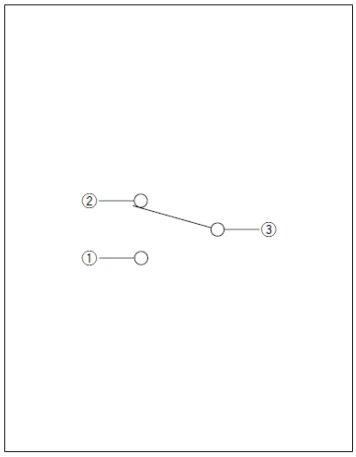

Drawing No.3

■ Dimensions

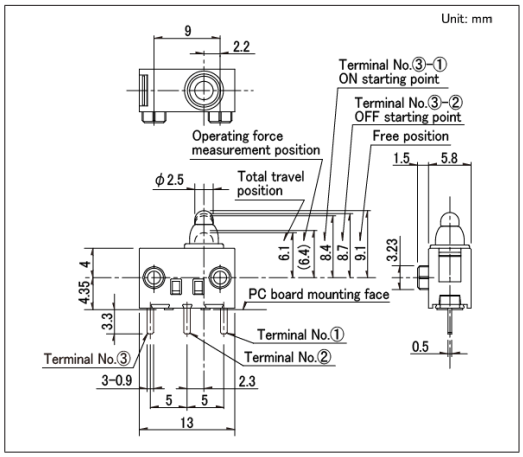

■ Circuit Diagram

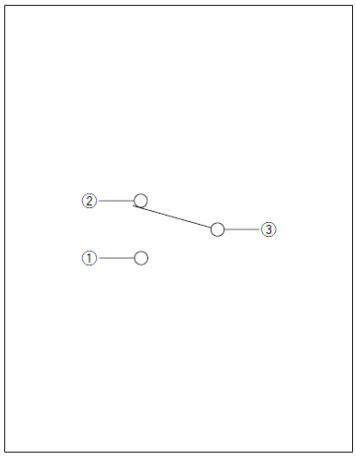

Drawing No.4

■ Dimensions

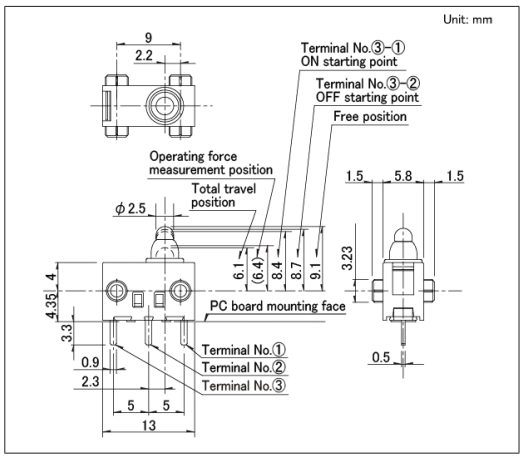

■ Circuit Diagram

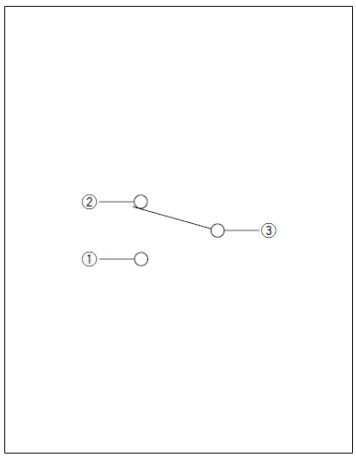

Drawing No.5

■ Dimensions

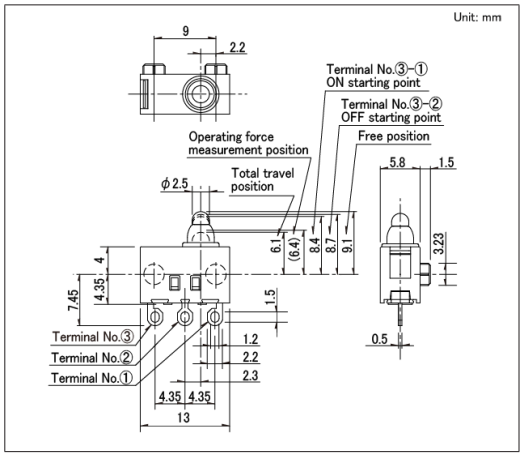

■ Circuit Diagram

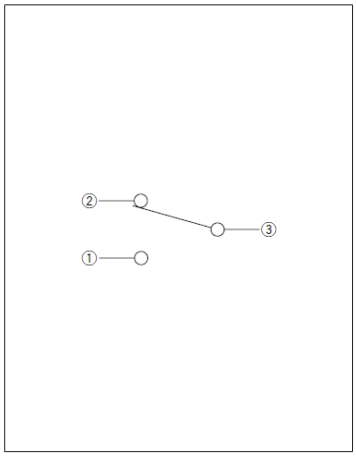

Drawing No.6

■ Dimensions

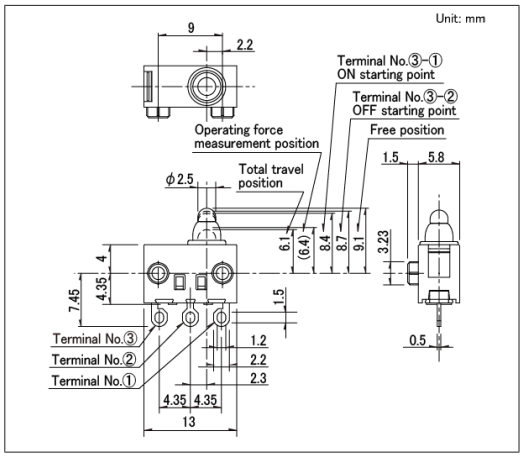

■ Circuit Diagram

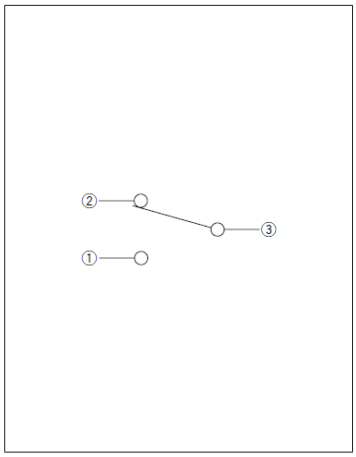

Drawing No.7

■ Dimensions

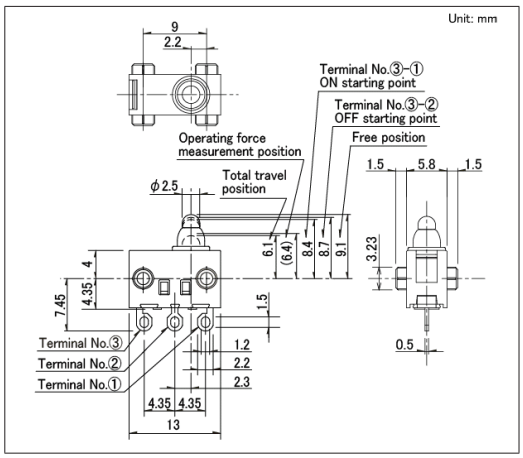

■ Circuit Diagram

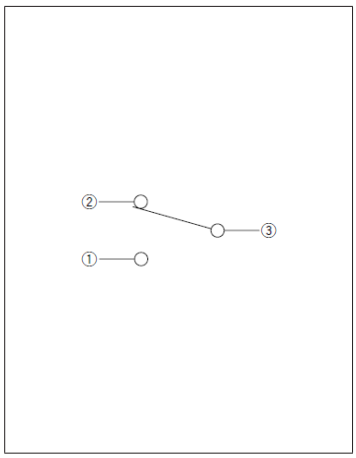

Drawing No.8

■ Dimensions

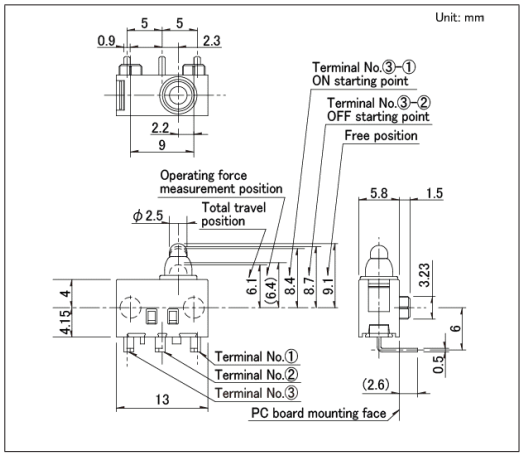

■ Circuit Diagram

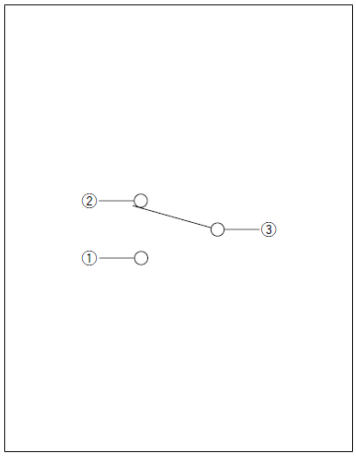

Drawing No.9

■ Dimensions

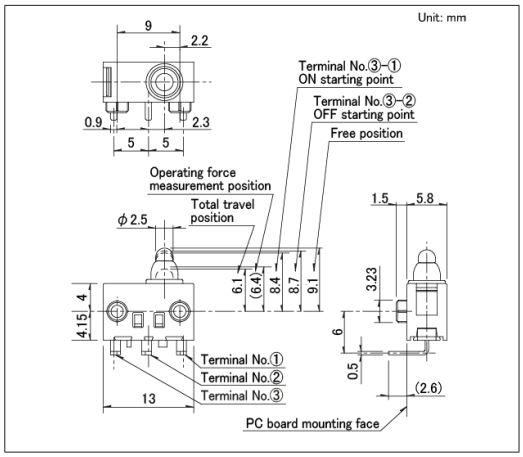

■ Circuit Diagram

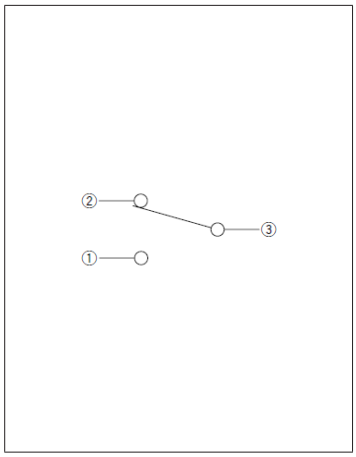

Drawing No.10

■ Dimensions

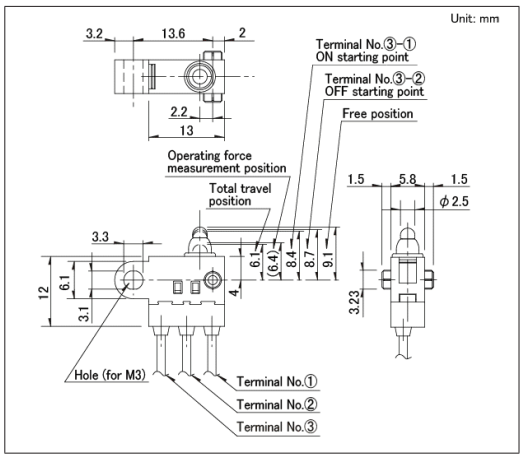

■ Circuit Diagram

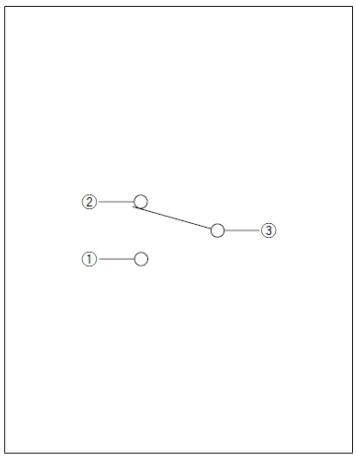

Drawing No.11

■ Dimensions

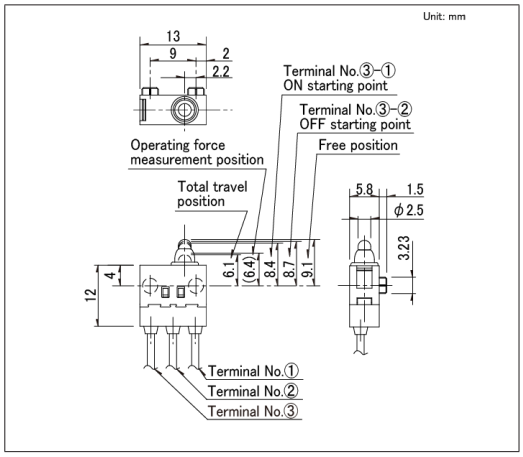

■ Circuit Diagram

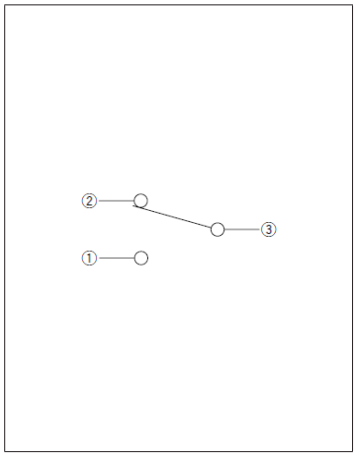

Drawing No.12

■ Dimensions

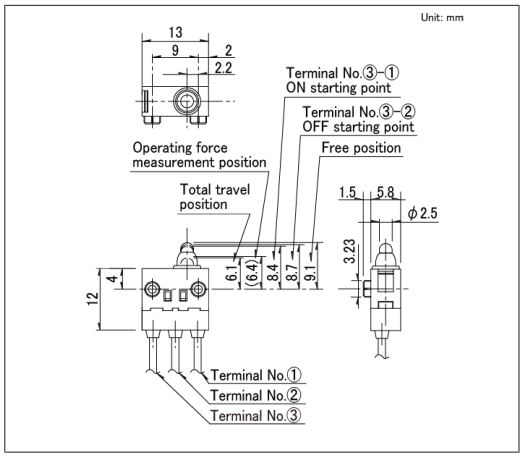

■ Circuit Diagram

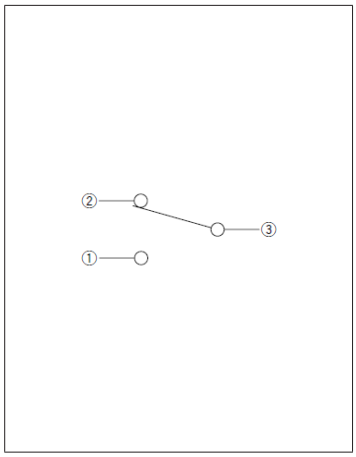

Drawing No.13

■ Dimensions

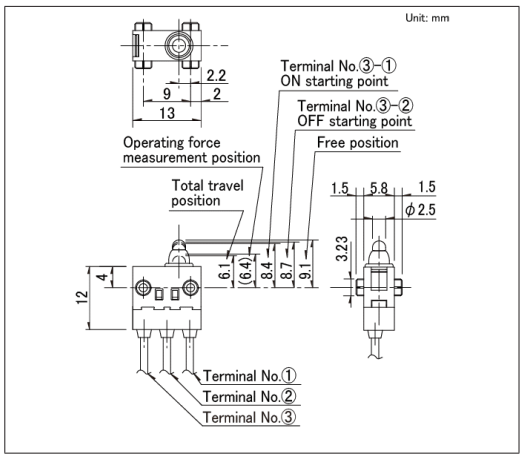

■ Circuit Diagram

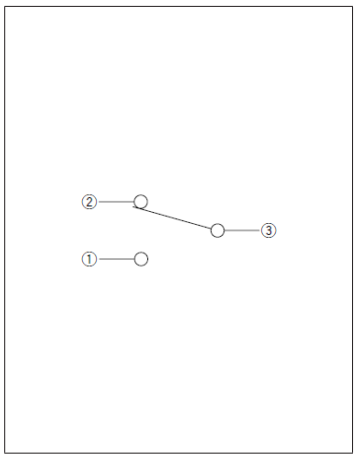

Drawing No.14

■ Dimensions

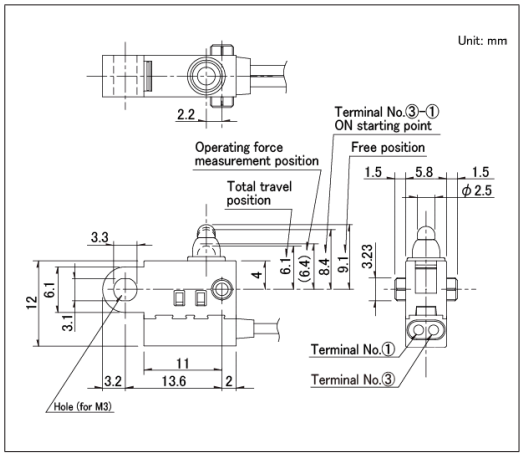

■ Circuit Diagram

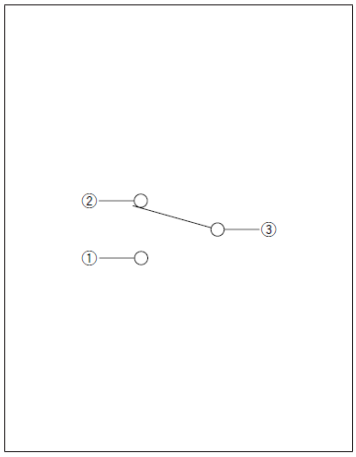

Drawing No.15

■ Dimensions

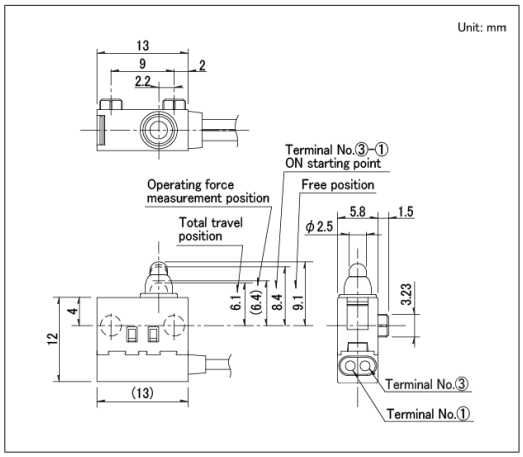

■ Circuit Diagram

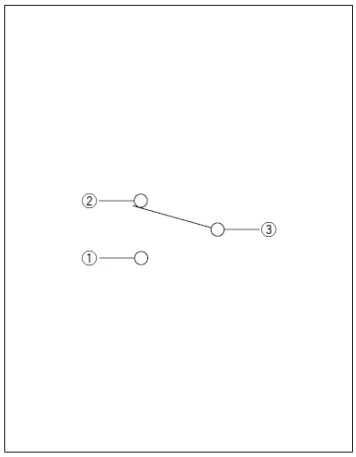

Drawing No.16

■ Dimensions

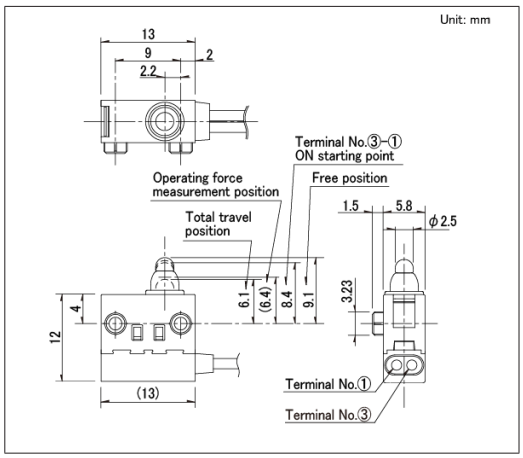

■ Circuit Diagram

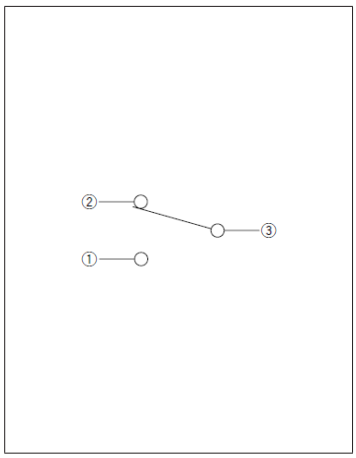

Drawing No.17

■ Dimensions

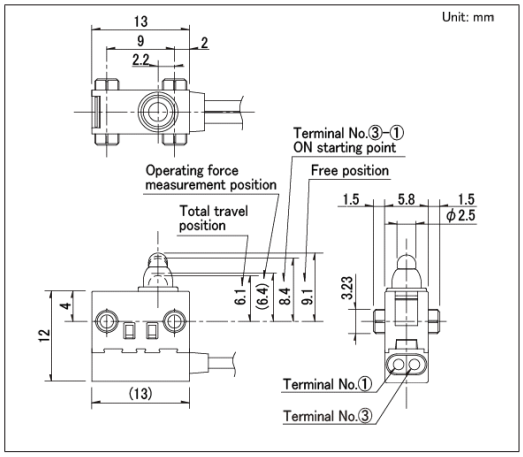

■ Circuit Diagram

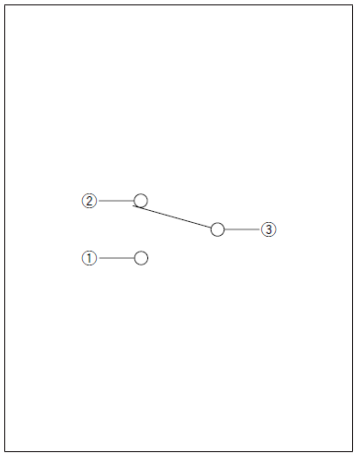

Drawing No.18

■ Dimensions

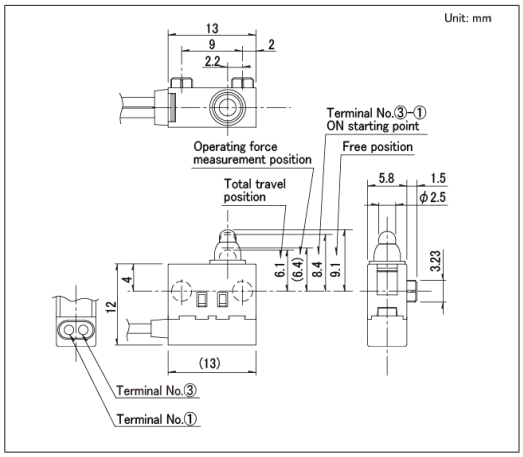

■ Circuit Diagram

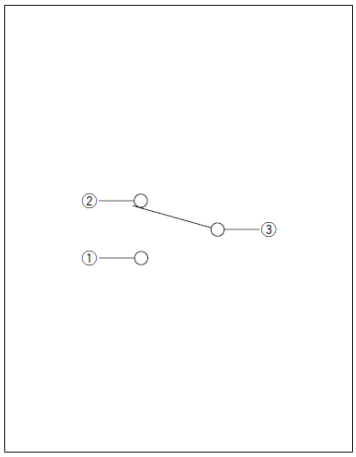

Drawing No.19

■ Dimensions

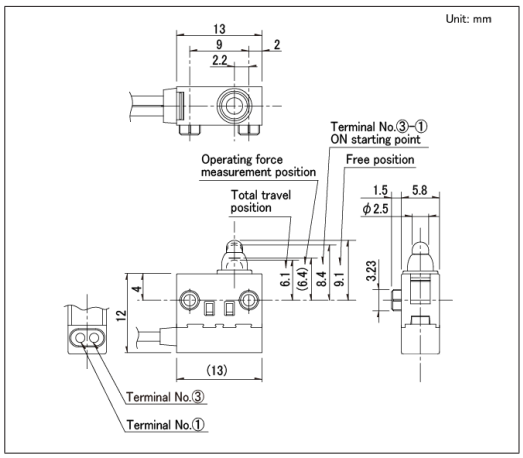

■ Circuit Diagram

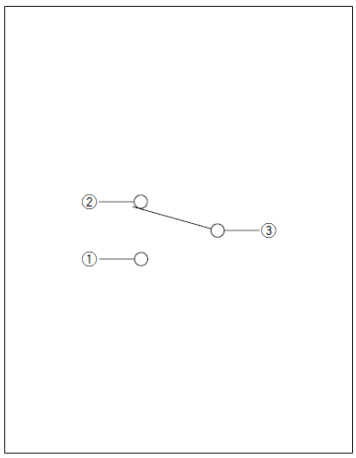

Drawing No.20

■ Dimensions

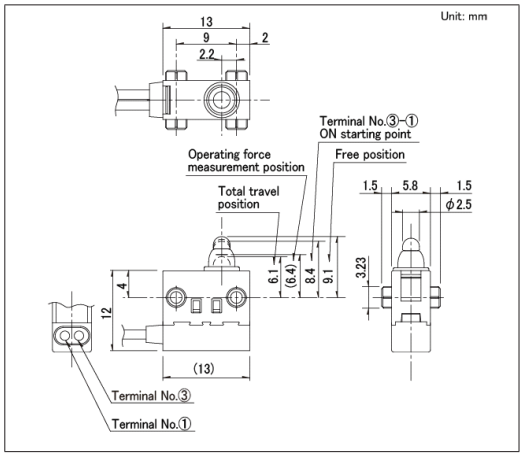

■ Circuit Diagram

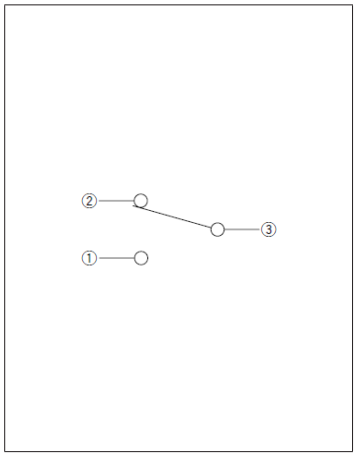

Drawing No.21

■ Dimensions

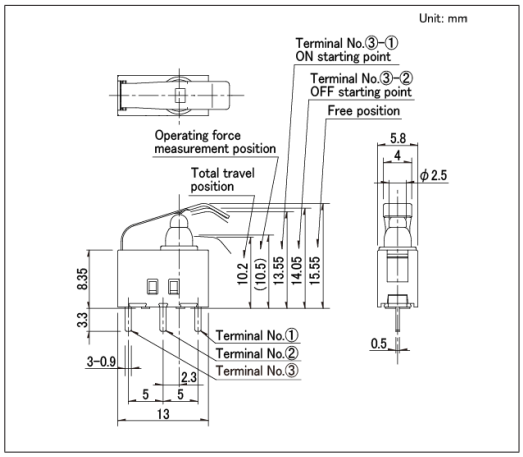

■ Circuit Diagram

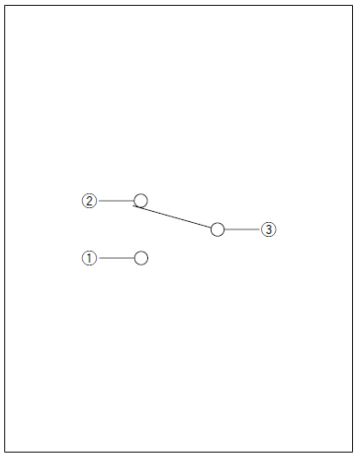

Water-proof Type

SPVQ3 Series

Drawing No.22

■ Dimensions

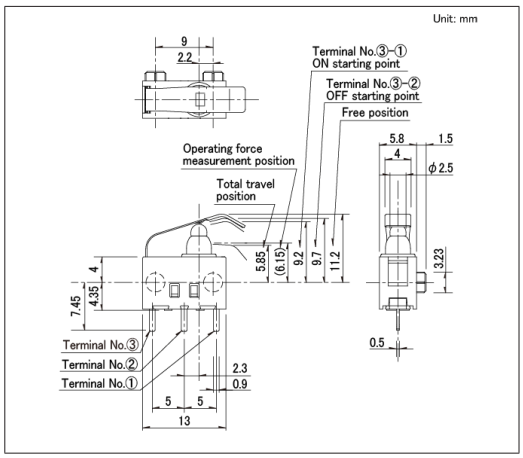

■ Circuit Diagram

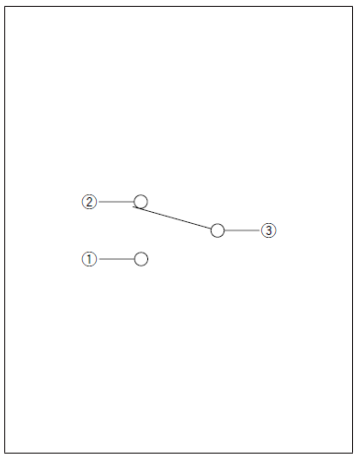

Drawing No.23

■ Dimensions

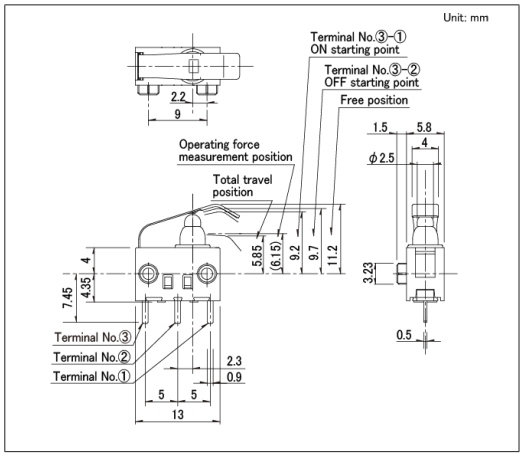

■ Circuit Diagram

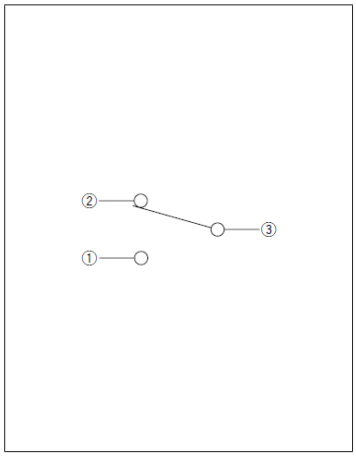

Drawing No.24

■ Dimensions

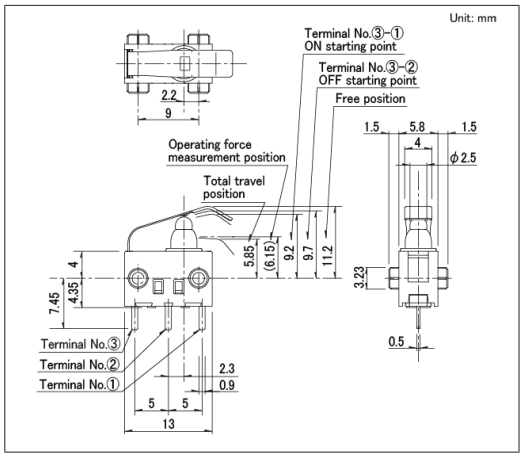

■ Circuit Diagram

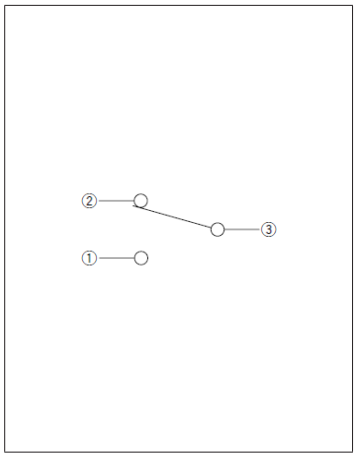

Drawing No.25

■ Dimensions

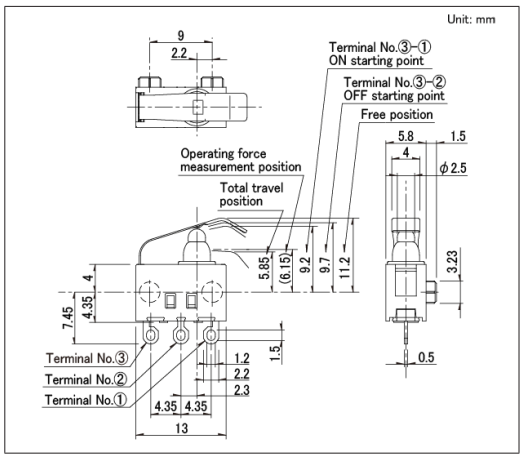

■ Circuit Diagram

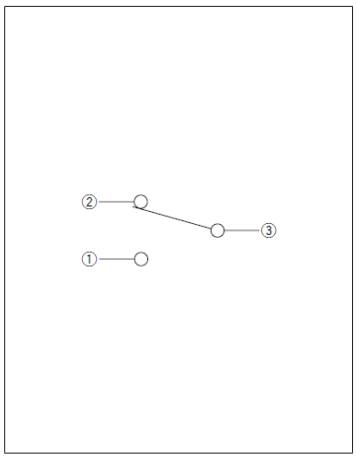

Drawing No.26

■ Dimensions

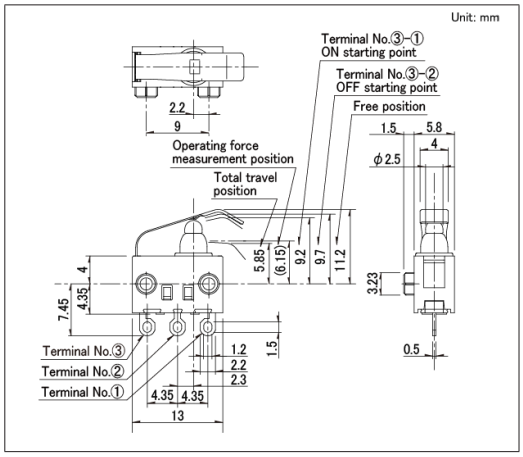

■ Circuit Diagram

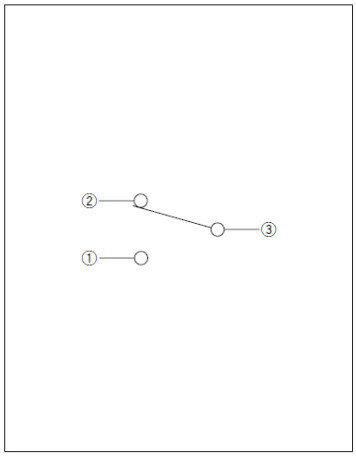

Drawing No.27

■ Dimensions

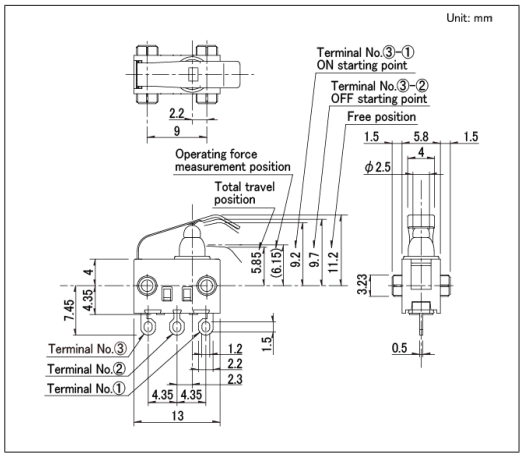

■ Circuit Diagram

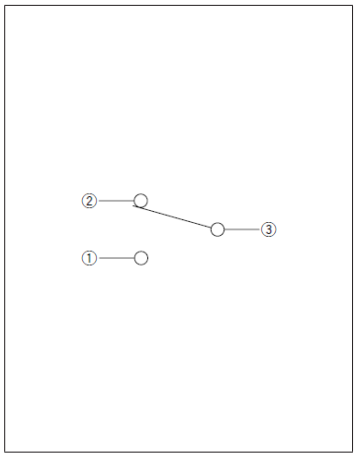

Drawing No.28

■ Dimensions

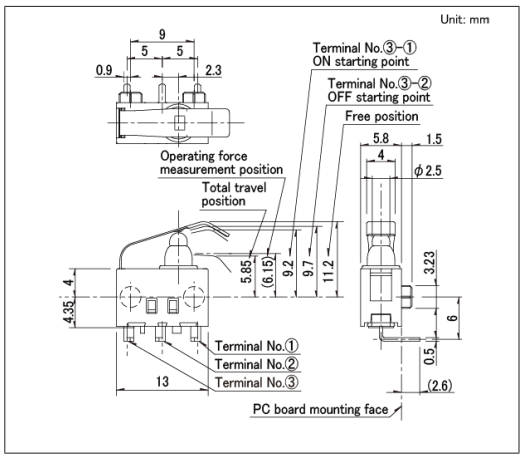

■ Circuit Diagram

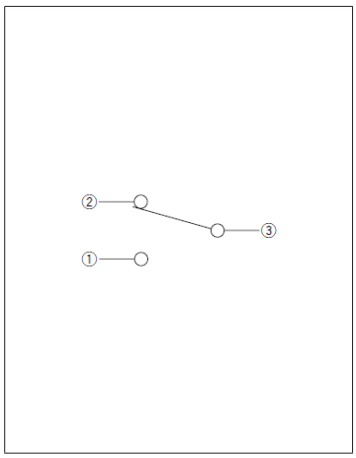

Drawing No.29

■ Dimensions

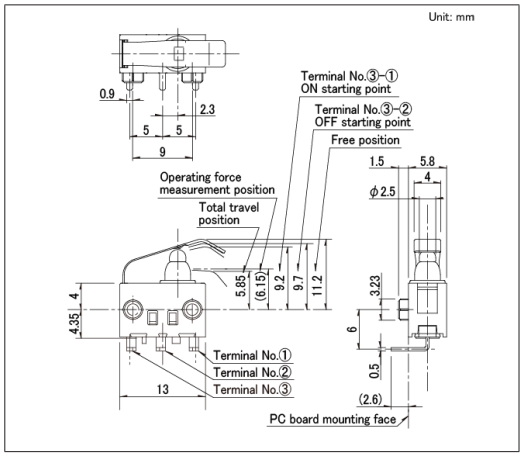

■ Circuit Diagram

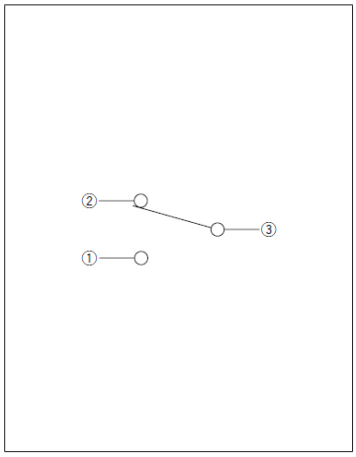

Drawing No.30

■ Dimensions

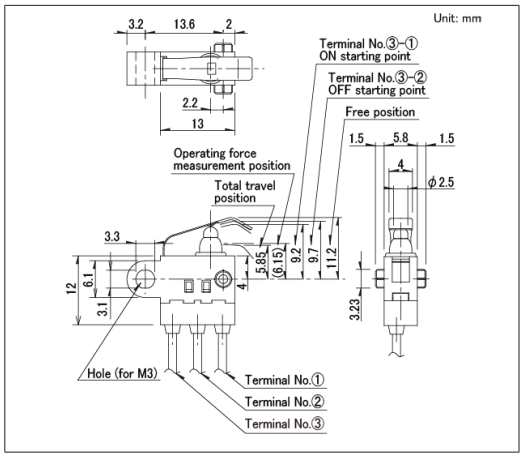

■ Circuit Diagram

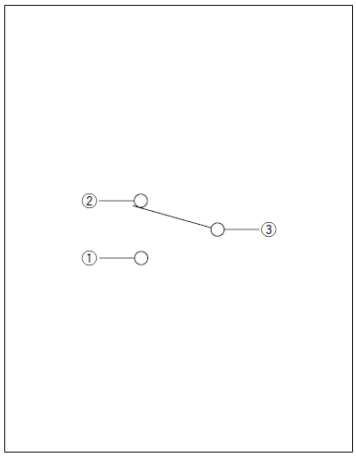

Drawing No.31

■ Dimensions

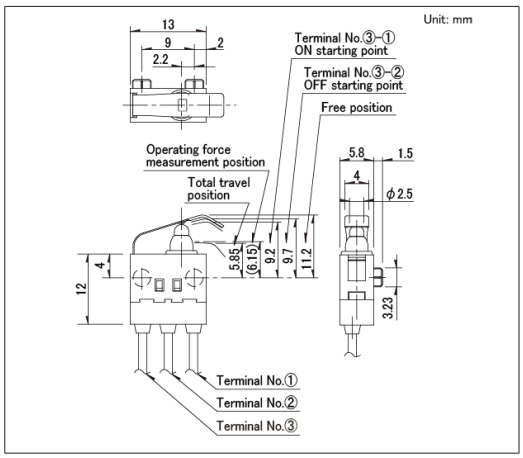

■ Circuit Diagram

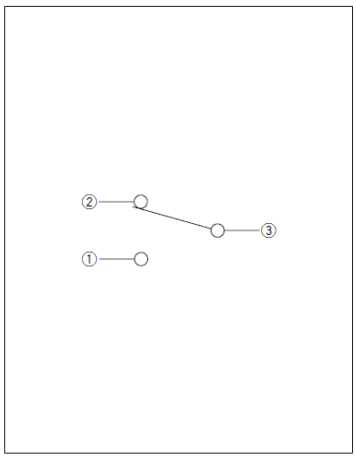

Drawing No.32

■ Dimensions

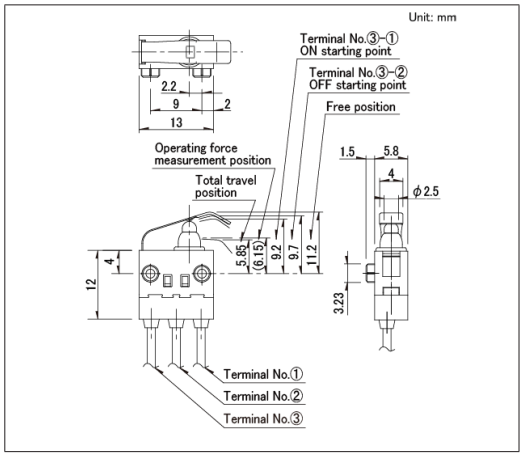

■ Circuit Diagram

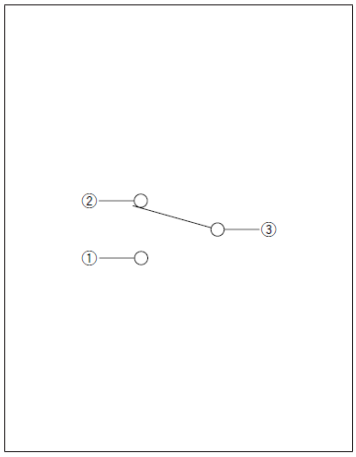

Drawing No.33

■ Dimensions

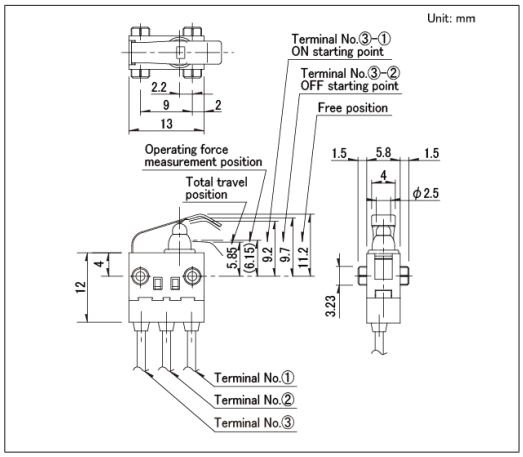

■ Circuit Diagram

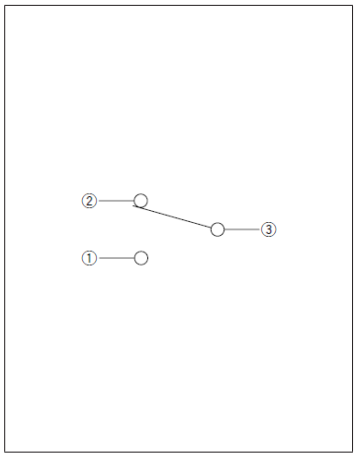

Drawing No.34

■ Dimensions

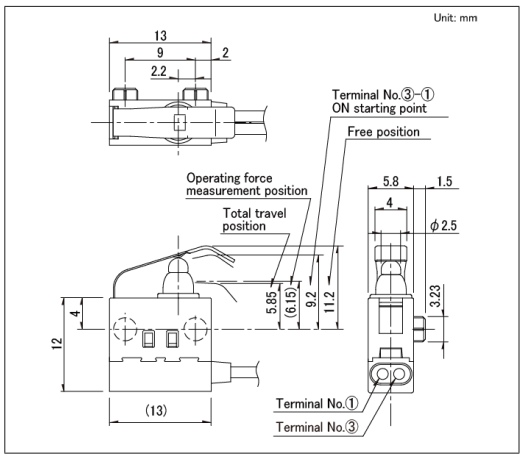

■ Circuit Diagram

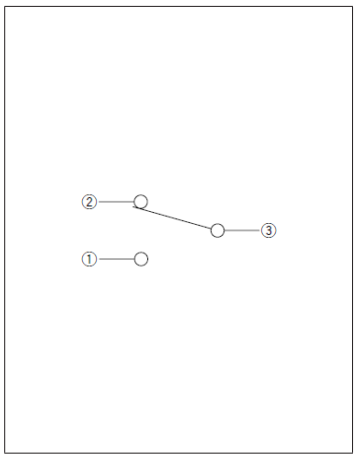

Drawing No.35

■ Dimensions

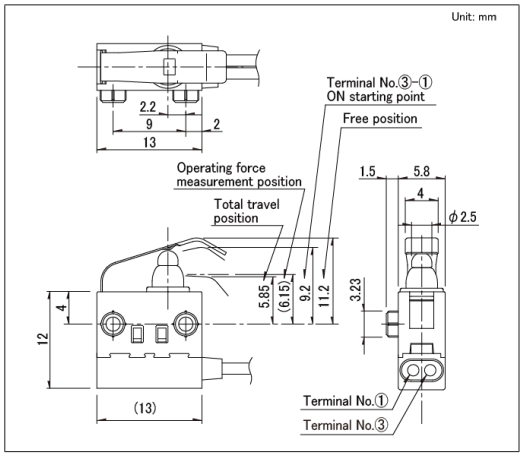

■ Circuit Diagram

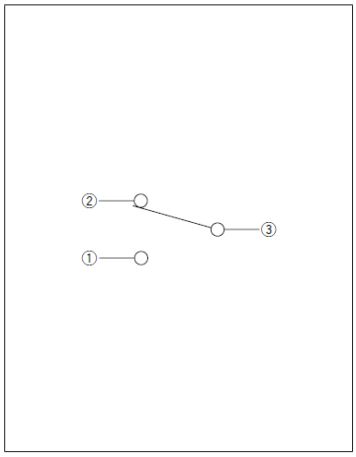

Drawing No.36

■ Dimensions

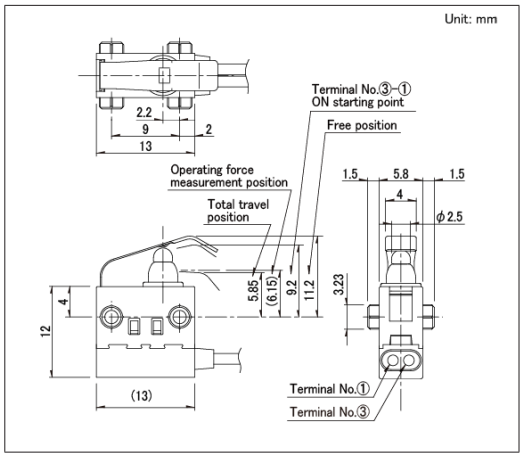

■ Circuit Diagram

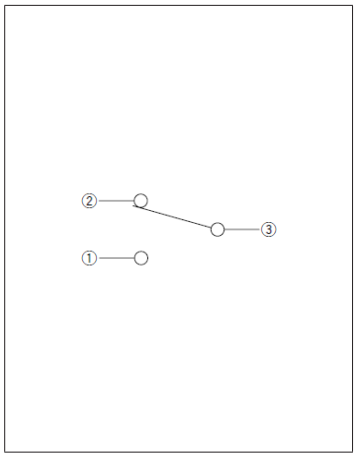

Drawing No.37

■ Dimensions

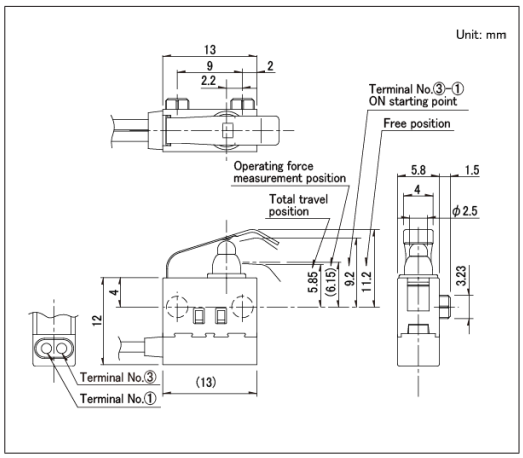

■ Circuit Diagram

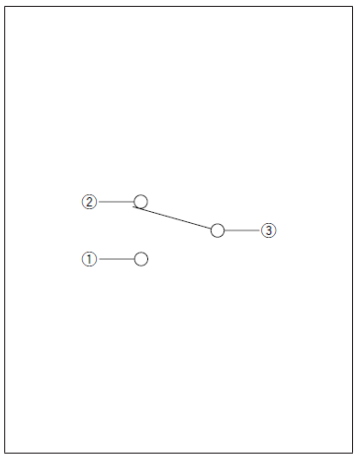

Drawing No.38

■ Dimensions

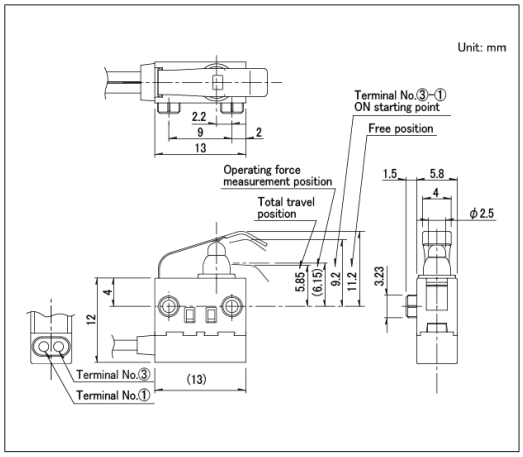

■ Circuit Diagram

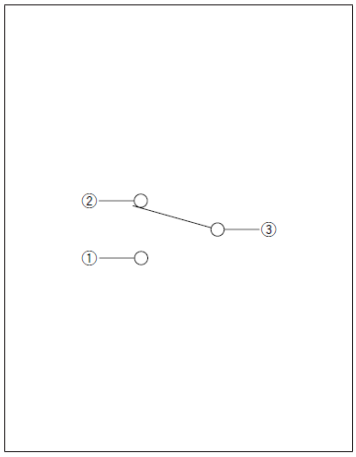

Drawing No.39

■ Dimensions

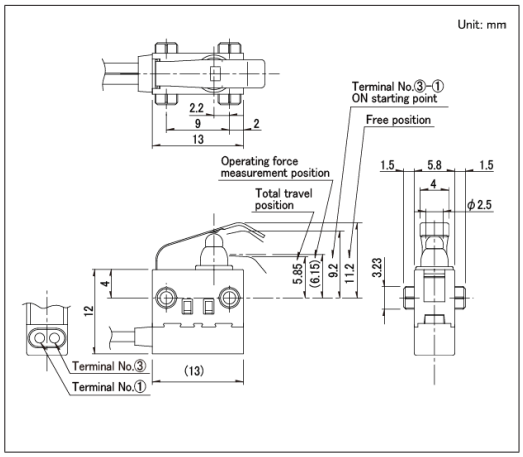

■ Circuit Diagram

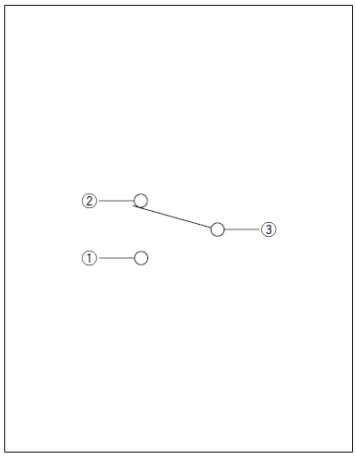

Drawing No.40

■ Dimensions

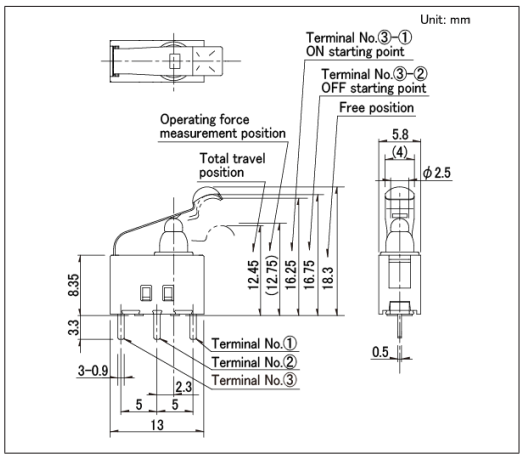

■ Circuit Diagram

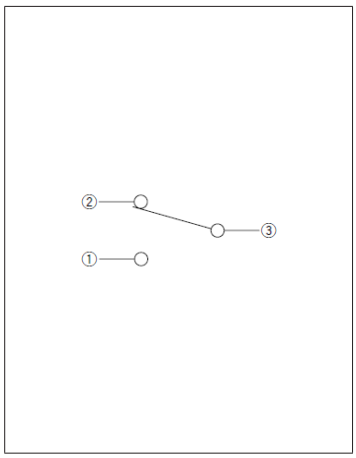

Drawing No.41

■ Dimensions

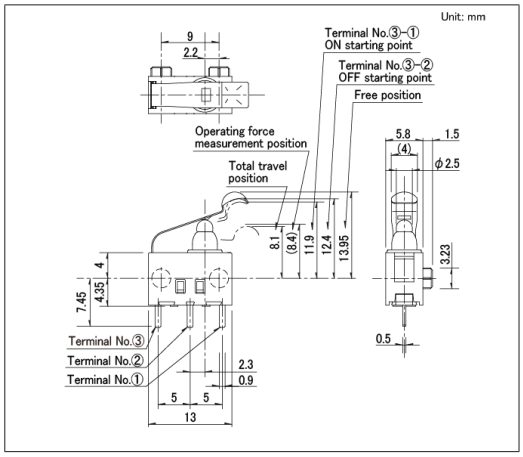

■ Circuit Diagram

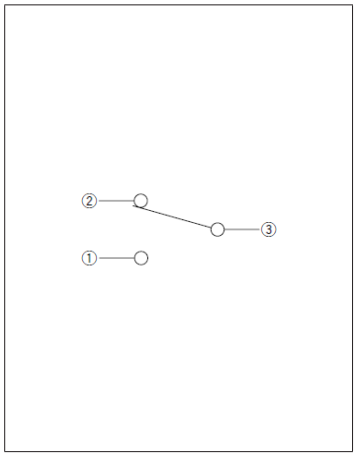

Drawing No.42

■ Dimensions

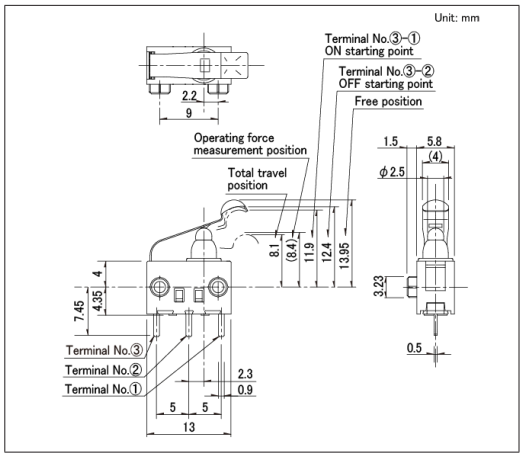

■ Circuit Diagram

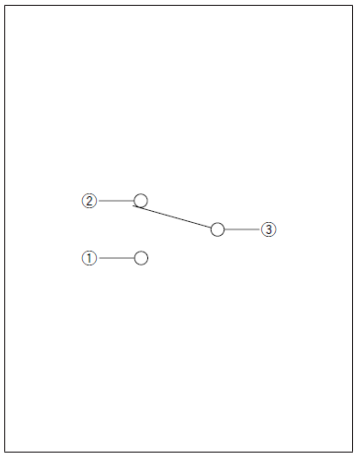

Drawing No.43

■ Dimensions

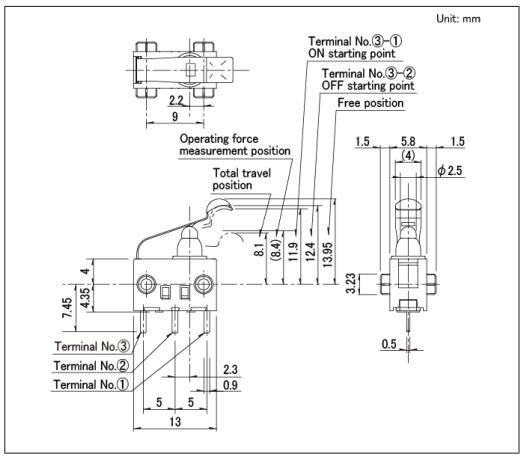

■ Circuit Diagram

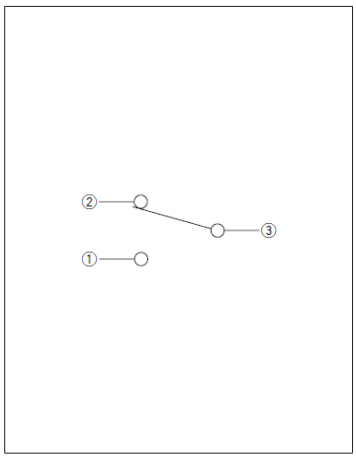

Drawing No.44

■ Dimensions

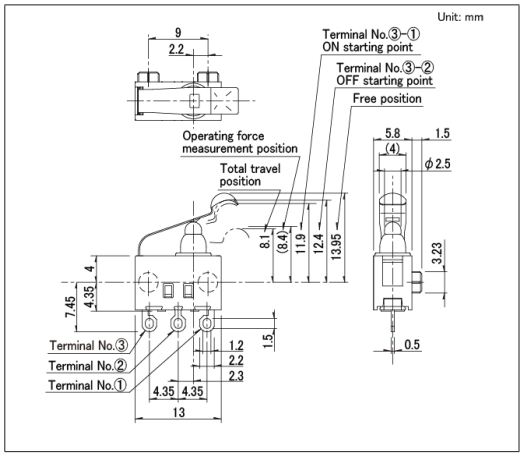

■ Circuit Diagram

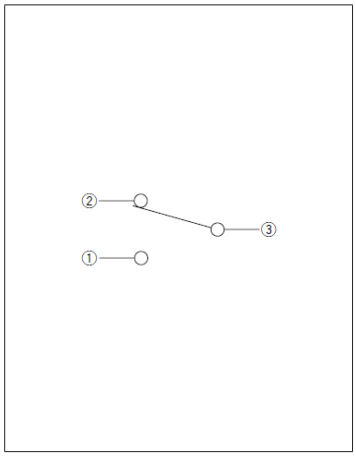

Drawing No.45

■ Dimensions

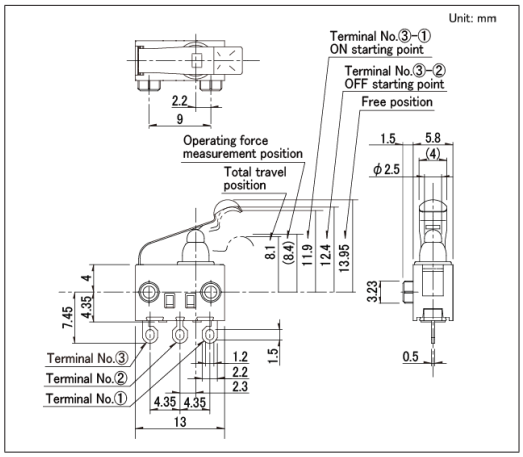

■ Circuit Diagram

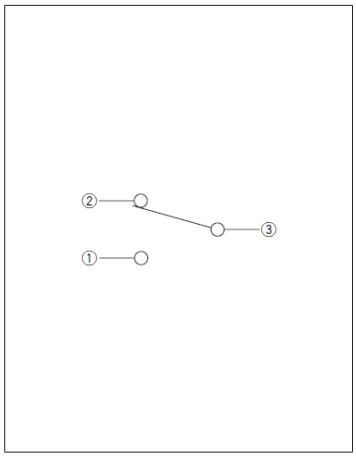

Drawing No.46

■ Dimensions

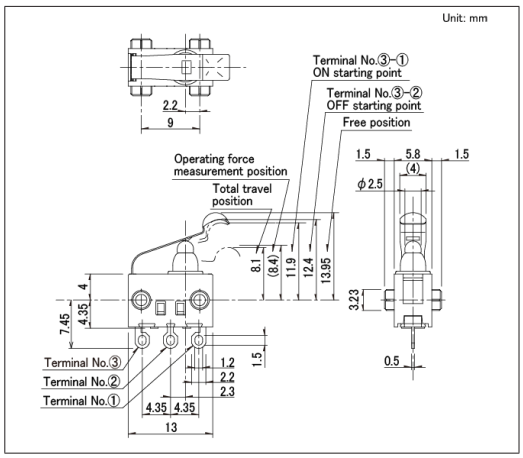

■ Circuit Diagram

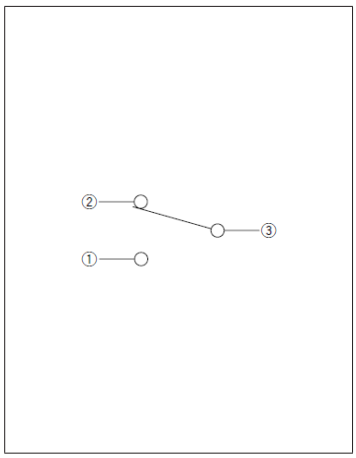

Drawing No.47

■ Dimensions

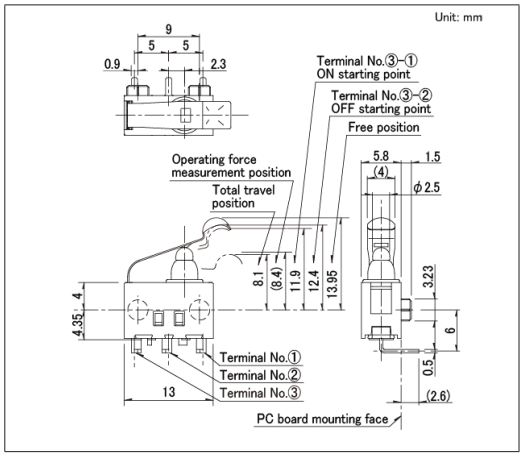

■ Circuit Diagram

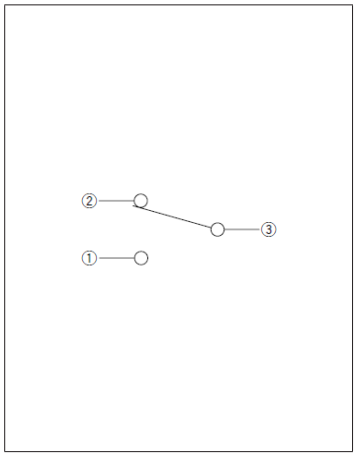

Drawing No.48

■ Dimensions

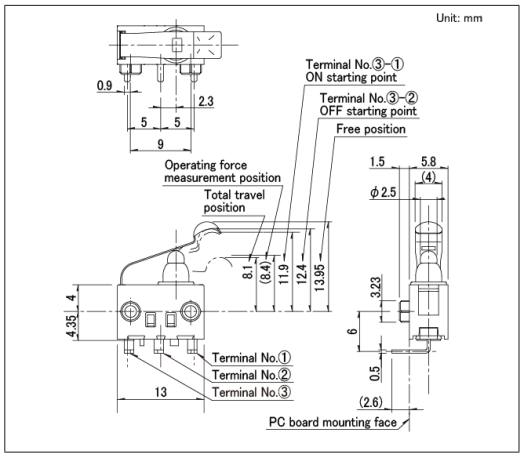

■ Circuit Diagram

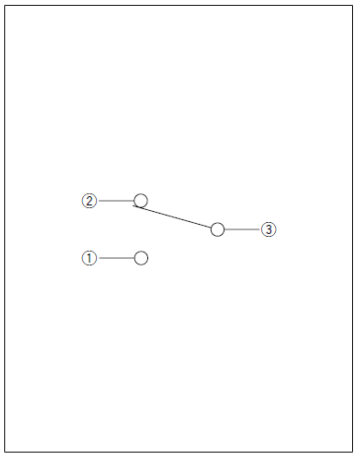

Drawing No.49

■ Dimensions

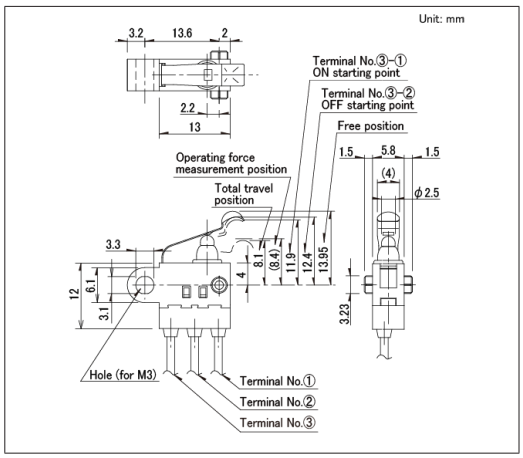

■ Circuit Diagram

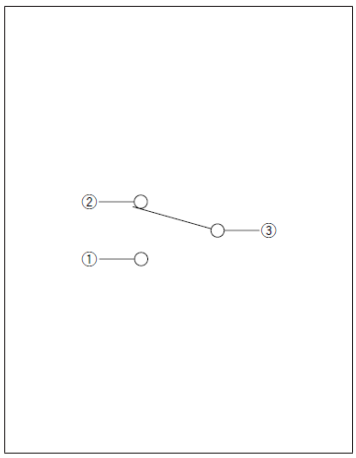

Drawing No.50

■ Dimensions

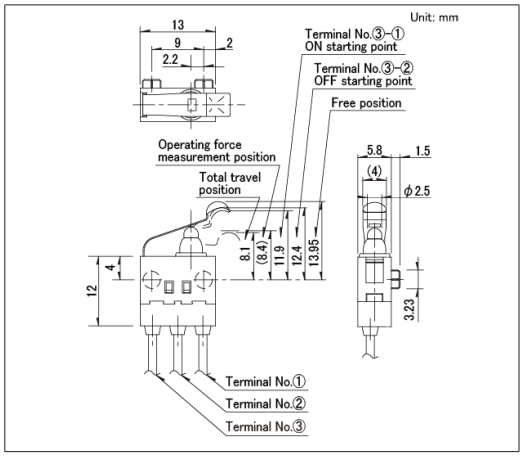

■ Circuit Diagram

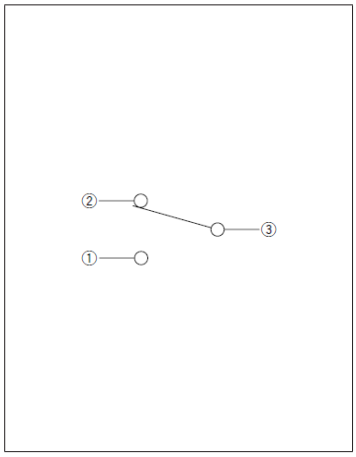

Drawing No.51

■ Dimensions

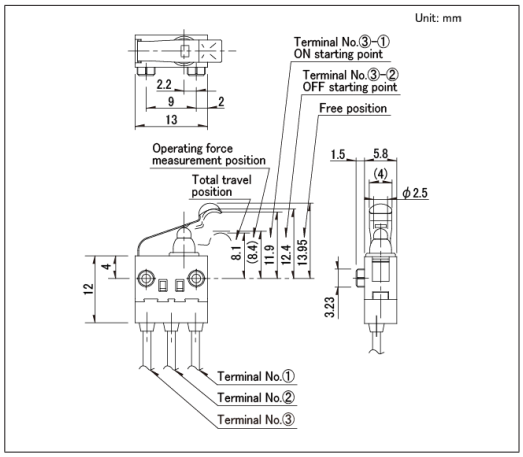

■ Circuit Diagram

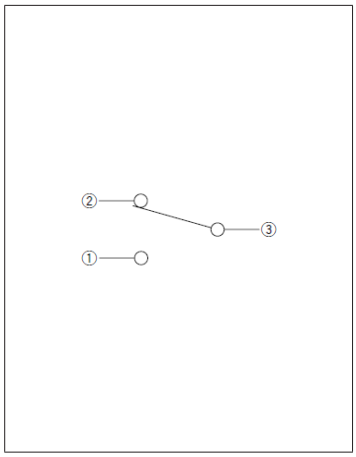

Drawing No.52

■ Dimensions

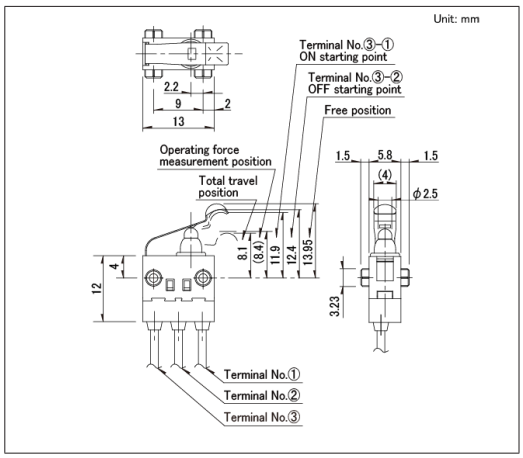

■ Circuit Diagram

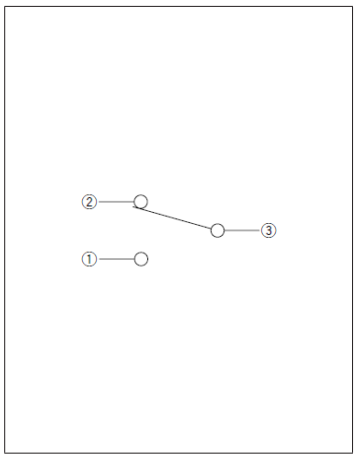

Drawing No.53

■ Dimensions

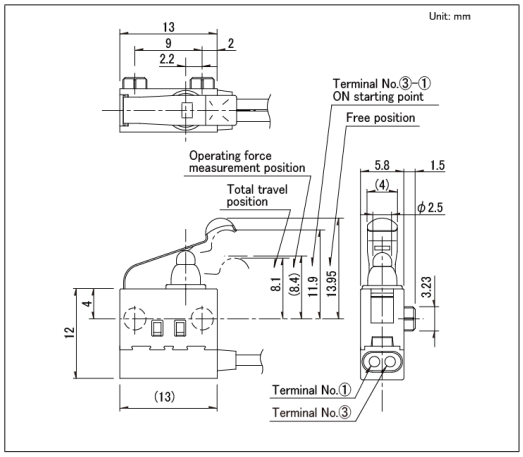

■ Circuit Diagram

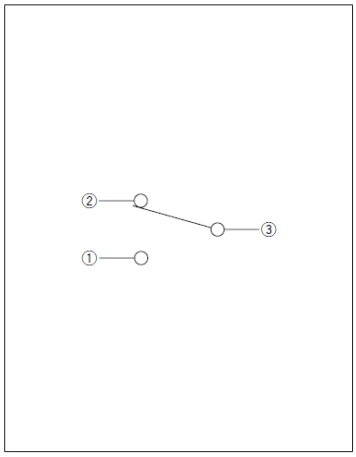

Drawing No.54

■ Dimensions

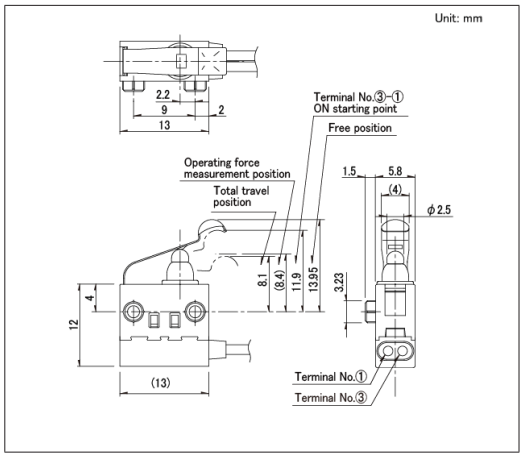

■ Circuit Diagram

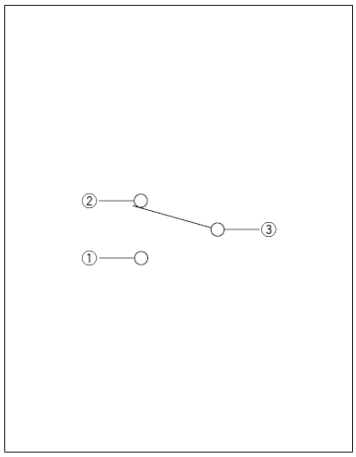

Drawing No.55

■ Dimensions

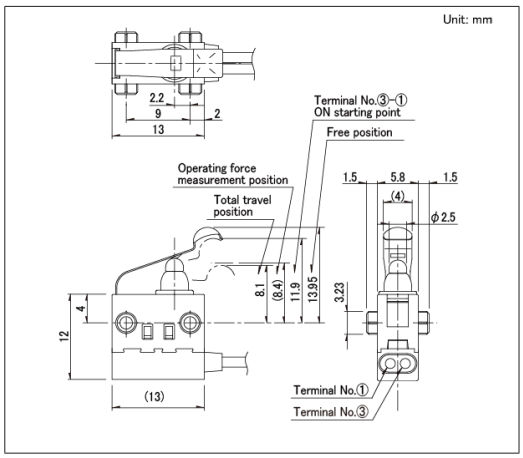

■ Circuit Diagram

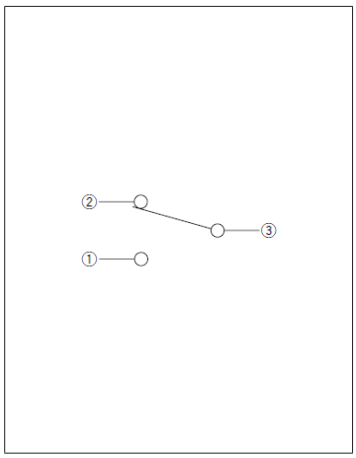

Drawing No.56

■ Dimensions

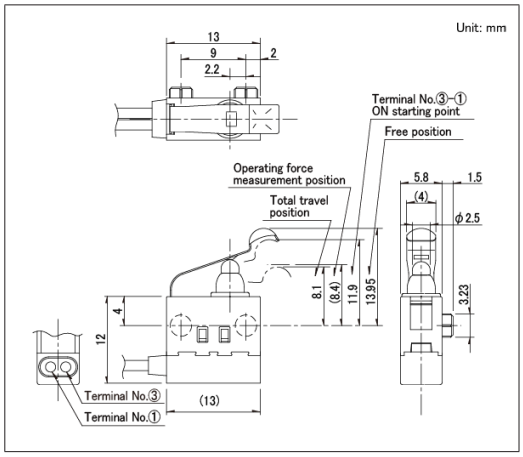

■ Circuit Diagram

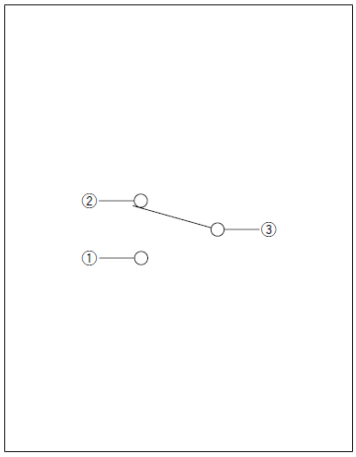

Drawing No.57

■ Dimensions

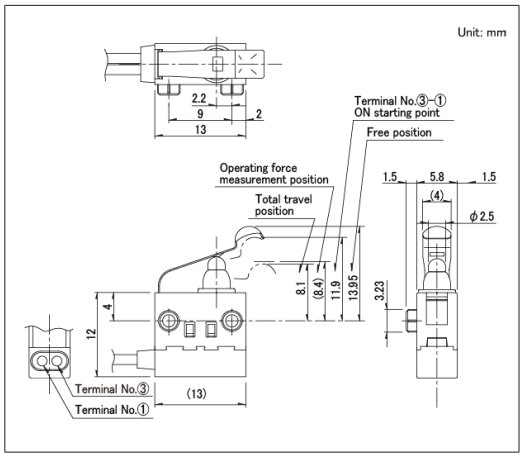

■ Circuit Diagram

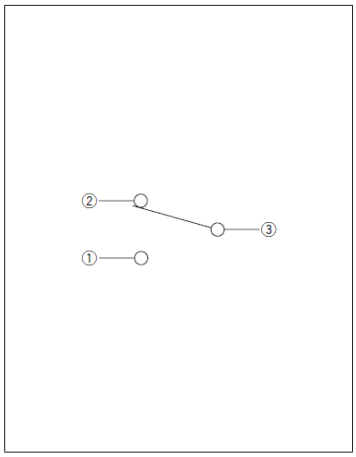

Drawing No.58

■ Dimensions

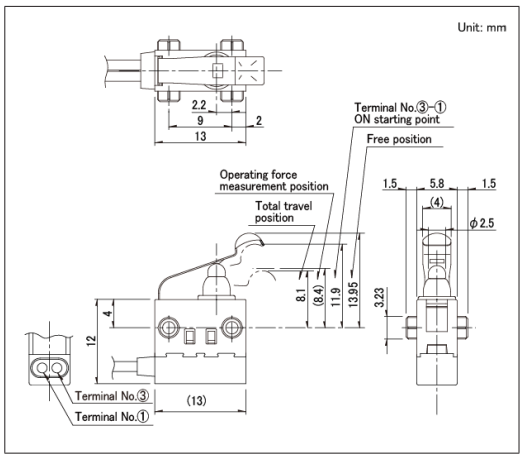

■ Circuit Diagram

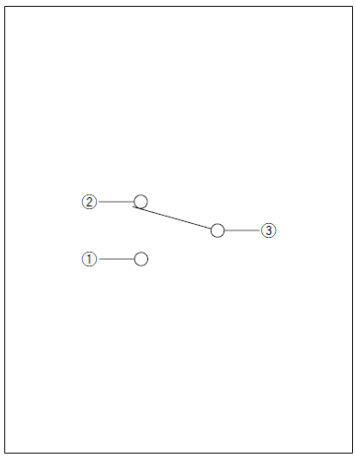

Water-proof Type
SPVQ6 Series

Compact type with body dimensions of 13.3×5.3mm and a height of 7.0mm.

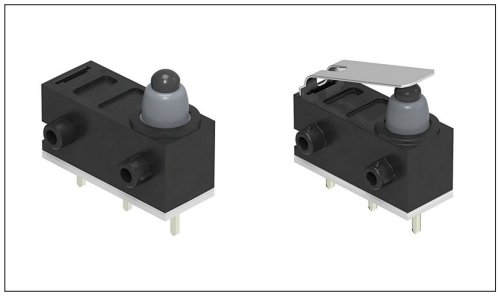

Automotive | Water-proof Type | Dust-proof Type

- Rating(max.)/(min.)(Resistive load):0.1A 12V DC/50μA 5V DC
- Contact resistance(Initial/After operating life):500mΩ max./1Ω max.
- Operating life without load:300,000 cycles
- Operating life with load Rating(max.)(Resistive load):
  300,000 cycles 1Ω max.

Applications:Energy_Industrial:Robots, drones,Industrial equipment
Home:Major home appliances
Automotive:Hood Latch (Side/Rear/Door/Gear)

■ Product List

Products No.	Type	Poles	Positions	Operating force	Changeover timing	Operation part shape	Terminal type	Main body form	Dimensions (W×D×H) (mm)	Water-proof	Dust-proof	Automotive	Drawing No.
SPVQ640102	—	1	2	1±0.5N	Non shorting	Push	For PC board	Boss - right side	5.3×13.3×6.5	●	●	●	1
SPVQ640202		1	2	1±0.5N	Non shorting	Push	For PC board	Boss - left side	5.3×13.3×6.5	●	●	●	2
SPVQ630104		1	2	3N max.	Non shorting	Actuator	For PC board	Boss - right side	5.3×13.3×6.5	●	●	●	3
SPVQ630203		1	2	3N max.	Non shorting	Actuator	For PC board	Boss - left side	5.3×13.3×6.5	●	●	●	4
SPVQ6R	With internal resistor type	1	1	3N max.	Non shorting	Actuator	Press-fit (normal type)	Without boss / Left bending	5.3×13.3×6.5	●	●	●	5

⚠Note

1. This catalog shows only outline specifications. When using the products, please obtain formal specifications for supply.
2. This unit cannnot be used in water (IP6K7 rating, except for terminal).
3. Please place purchase orders per minimum order unit (integer).
4. This products can be used in vehicles.
   Although these products are designed to perform over a wide operating temperature range, please ensure that you receive and read the formal delivery specifications before use.
5. For the Recommended Unit Terminal Shape for Press-Fit Terminals (Normally Open) for SPVQ6R, please check our website.

■ Packing Specifications

Tray

Number of packages(pcs.)		Export package measurements (mm)
1 case / Japan	1 case / export packing	
1,500	6,000	540×360×270

Water-proof Type

SPVQ6 Series

Drawing No.1

■ Dimensions

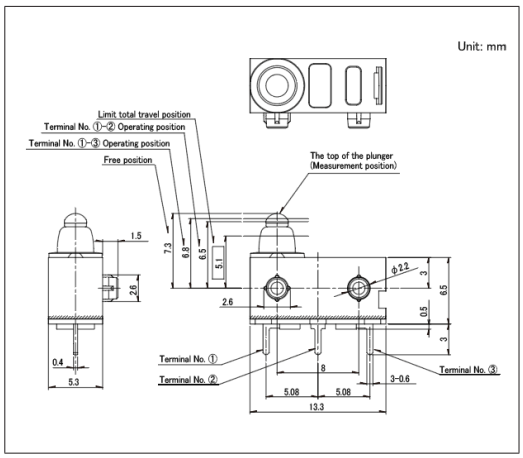

■ Circuit Diagram

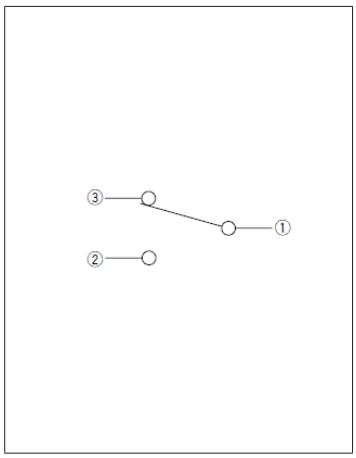

Drawing No.2

■ Dimensions

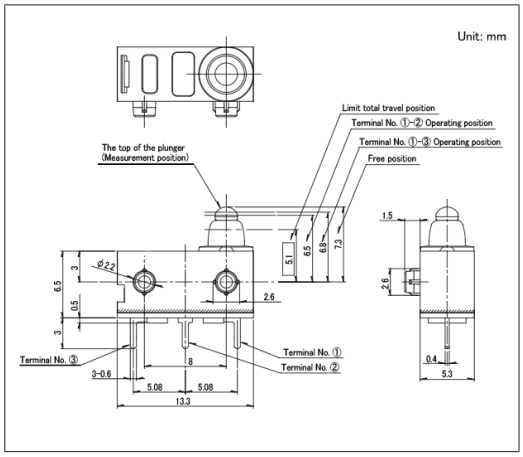

■ Circuit Diagram

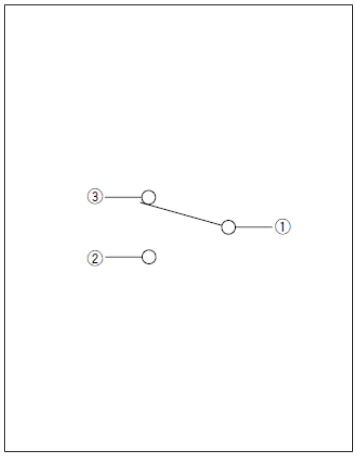

Drawing No.3

■ Dimensions

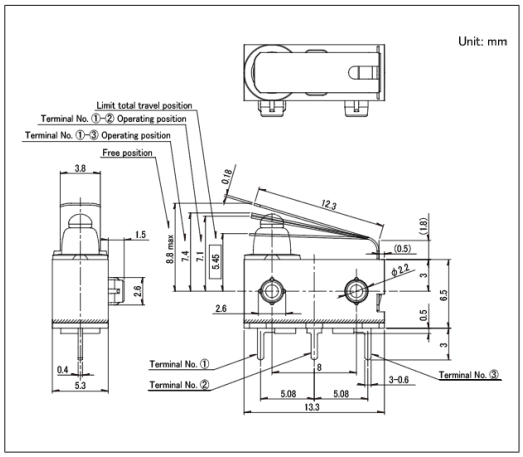

■ Circuit Diagram

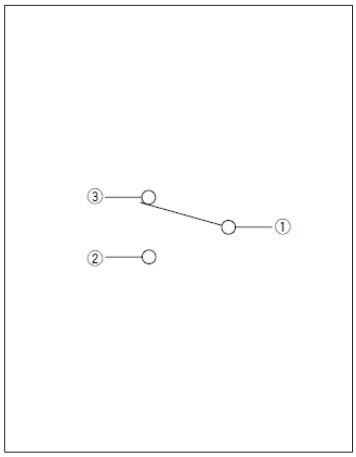

Drawing No.4

■ Dimensions

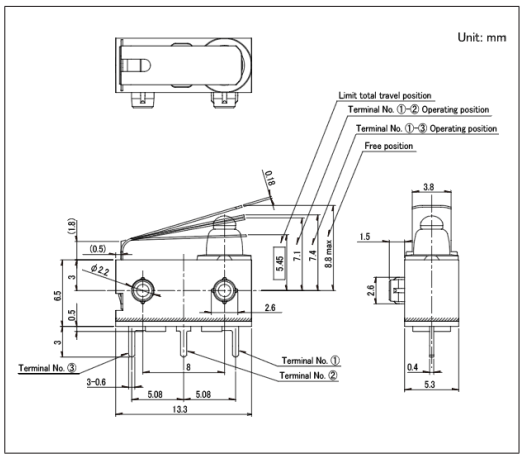

■ Circuit Diagram

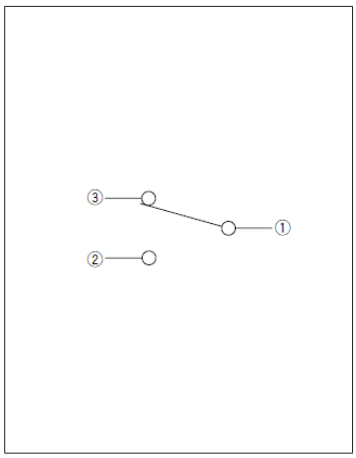

Drawing No.5

■ Dimensions

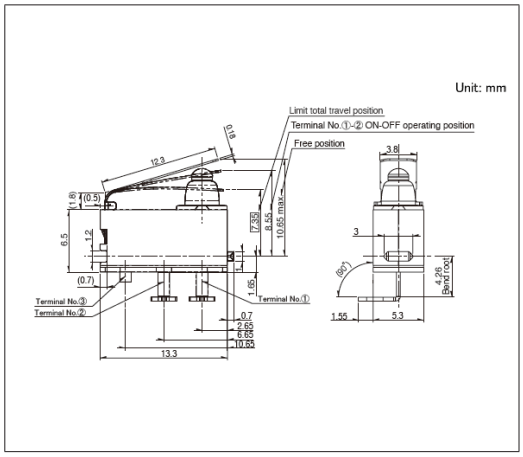

■ Circuit Diagram

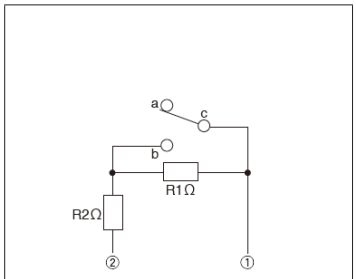

Electrical output Initial

Pluger position / Terminal No.	Free	Depress
①－②	(R1+R2)Ω	R2Ω

Please contact us for resistance specifications and rated power.

Water-proof Type
SPVQ7 Series

Low-profile type with a body height of 6.7mm.

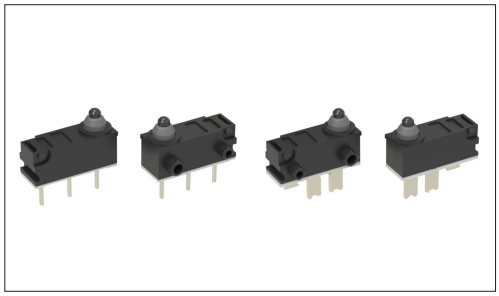

Automotive | Water-proof Type | Dust-proof Type

- Rating(max.)/(min.)(Resistive load):0.1A 12V DC/50μA 5V DC
- Contact resistance(Initial/After operating life):500mΩ max./1Ω max.
- Operating life without load:300,000 cycles
- Operating life with load Rating(max.)(Resistive load):
  300,000 cycles 1Ω max.

Applications:Energy_Industrial:Robots, drones,Industrial equipment
Home:Major home appliances
Automotive:Hood Latch (Side/Rear/Door/Gear)

■ Product List

Products No.	Poles	Positions	Operating force	Changeover timing	Operation part shape	Terminal type	Main body form	Dimensions (W×D×H) (mm)	Water-proof	Dust-proof	Automotive	Drawing No.
SPVQ710103	1	2	1±0.5N	Non shorting	Push	For PC board	Boss - left side	5.4×14.7×6.7	●	●	●	1
SPVQ710203	1	2	1±0.5N	Non shorting	Push	For PC board	Boss - right side	5.4×14.7×6.7	●	●	●	2
SPVQ710304	1	1	1±0.5N	Non shorting	Push	For PC board	Boss - left side	5.4×14.7×6.7	●	●	●	3
SPVQ710404	1	1	1±0.5N	Non shorting	Push	For PC board	Boss - right side	5.4×14.7×6.7	●	●	●	4
SPVQ740303	1	1	1±0.5N	Non shorting	Push	For Lead	Boss - left side	5.4×14.7×6.7	●	●	●	5
SPVQ740403	1	1	1±0.5N	Non shorting	Push	For Lead	Boss - right side	5.4×14.7×6.7	●	●	●	6
SPVQ740103	1	2	1±0.5N	Non shorting	Push	For Lead	Boss - left side	5.4×14.7×6.7	●	●	●	7
SPVQ740203	1	2	1±0.5N	Non shorting	Push	For Lead	Boss - right side	5.4×14.7×6.7	●	●	●	8

⚠Note

1. This catalog shows only outline specifications. When using the products, please obtain formal specifications for supply.
2. This unit cannnot be used in water (IP6K7 rating, except for terminal).
3. Please place purchase orders per minimum order unit (integer).
4. This products can be used in vehicles.
   Although these products are designed to perform over a wide operating temperature range, please ensure that you receive and read the formal delivery specifications before use.

■ Packing Specifications

Tray

Number of packages(pcs.)		Export package measurements (mm)
1 case / Japan	1 case / export packing	
1,350	5,400	540 x 360 x 270

Water-proof Type

SPVQ7 Series

Drawing No.1

■ Dimensions

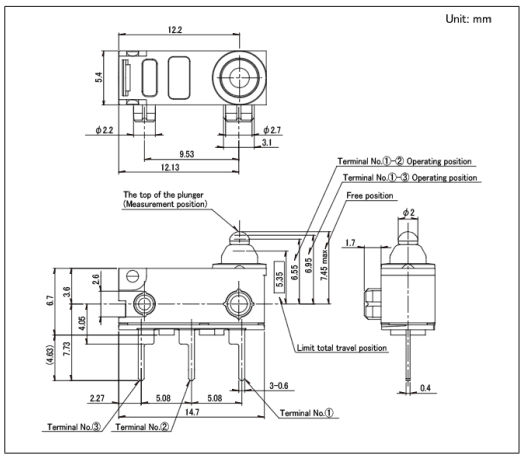

■ Circuit Diagram

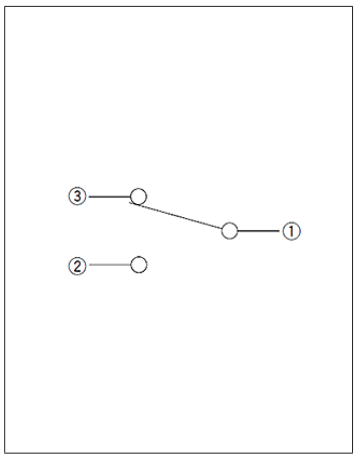

Drawing No.2

■ Dimensions

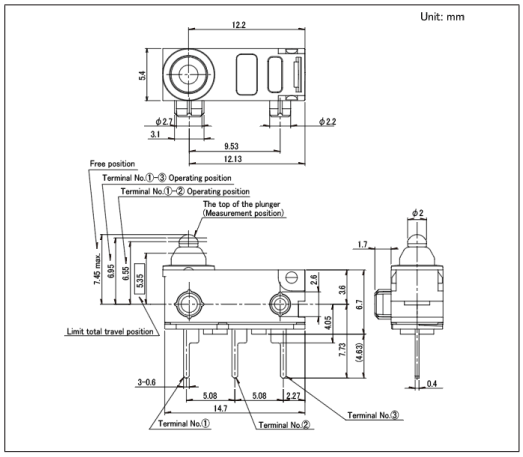

■ Circuit Diagram

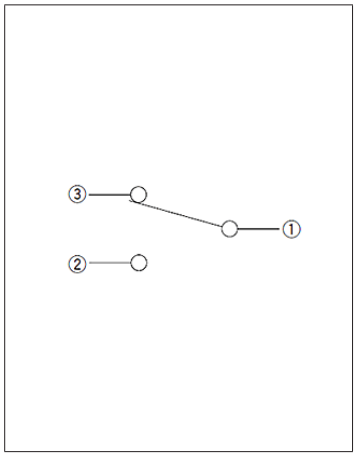

Drawing No.3

■ Dimensions

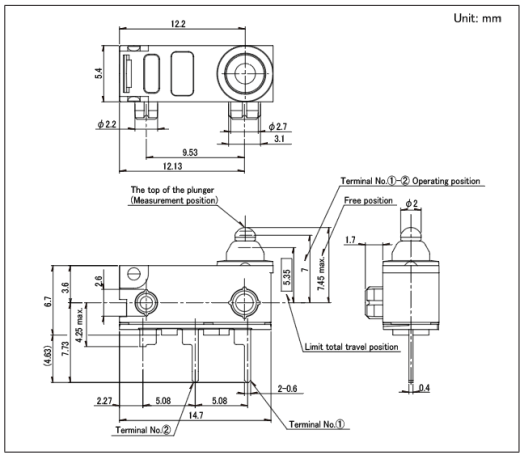

■ Circuit Diagram

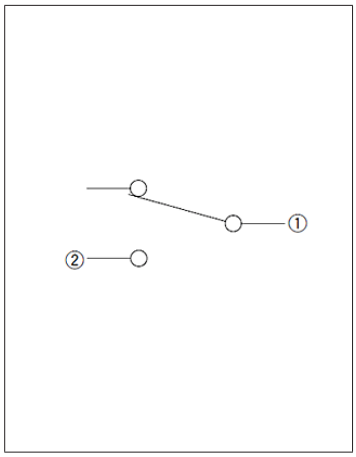

Drawing No.4

■ Dimensions

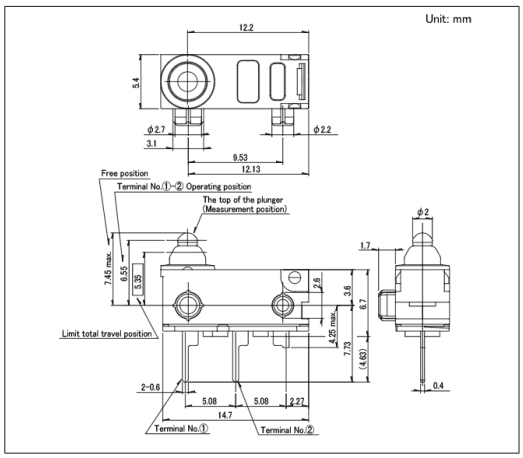

■ Circuit Diagram

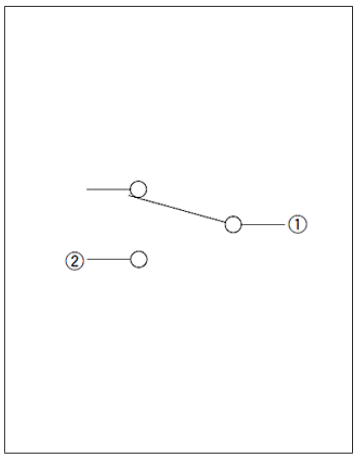

Drawing No.5

■ Dimensions

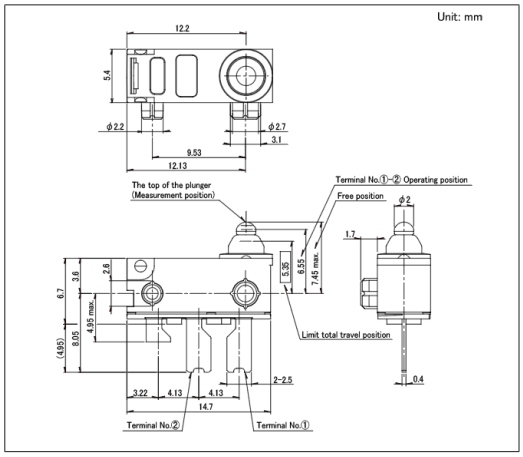

■ Circuit Diagram

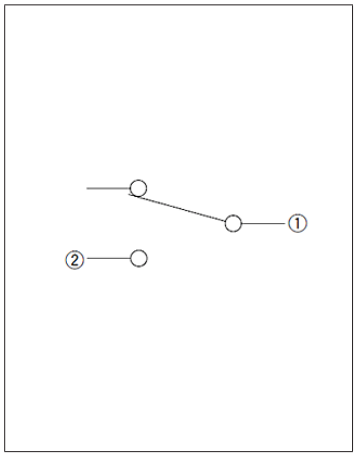

Drawing No.6

■ Dimensions

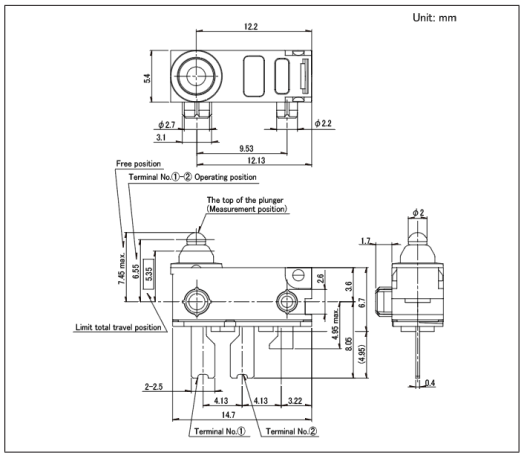

■ Circuit Diagram

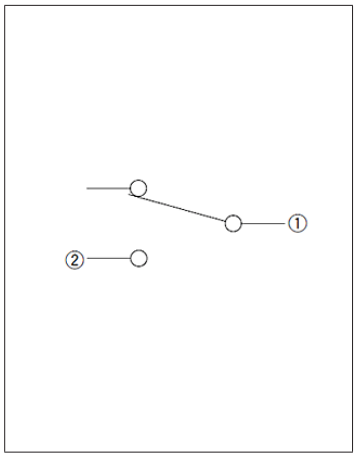

Drawing No.7

■ Dimensions

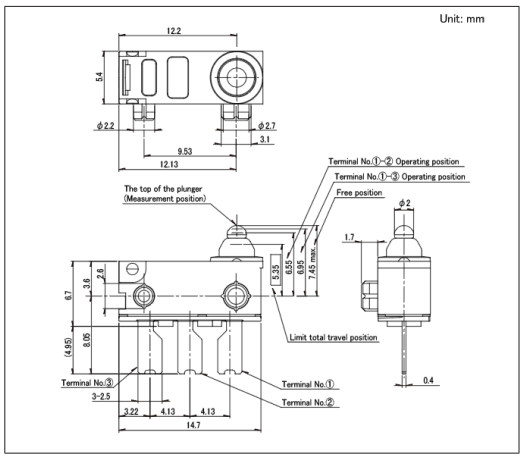

■ Circuit Diagram

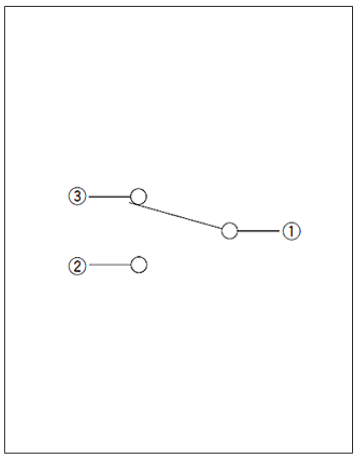

Drawing No.8

■ Dimensions

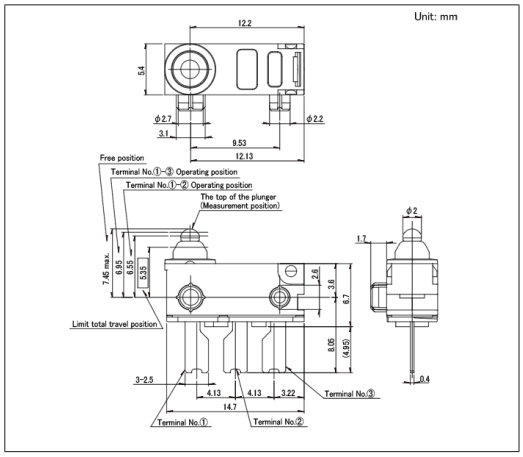

■ Circuit Diagram

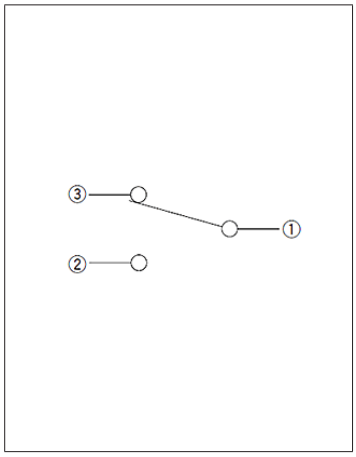

Water-proof Type
SPVQ8 Series

Offers a wide product variety with an industry-leading compact size of 8.3×5.3×7.0mm body dimensions.

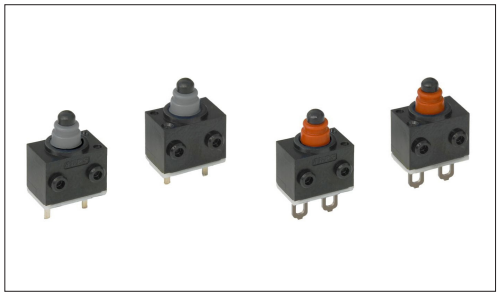

Automotive | Water-proof Type | Dust-proof Type

- Rating(max.)/(min.)(Resistive load):0.1A 16V DC/50μA 5V DC
- Contact resistance(Initial/After operating life):500mΩ max./1Ω max.
- Operating life without load:300,000 cycles
- Operating life with load Rating(max.)(Resistive load):
  300,000 cycles 1Ω max.

Applications:Energy_Industrial:Robots, drones,Industrial equipment
Home:Major home appliances
Automotive:Hood Latch (Side/Rear/Door/Gear)

■ Product List

Products No.	Type	Poles	Positions	Operating force	Terminal type	Circuit	Main body form	Dimensions (W×D×H) (mm)	Water-proof	Dust-proof	Automotive	Drawing No.
SPVQ810102	Standard type	1	1	1±0.5N	For PC board	N/O	Boss - both sides	5.3×8.3×6.5	●	●	●	1
SPVQ810302		1	1	1±0.5N	Angle	N/O	Boss - single side	5.3×8.3×6.5	●	●	●	2
SPVQ810402		1	1	1±0.5N	Angle	N/O	Without boss	5.3×8.3×6.5	●	●	●	3
SPVQ810502		1	1	1±0.5N	For PC board	N/O	Without boss	5.3×8.3×6.5	●	●	●	4
SPVQ810602		1	1	1±0.5N	For PC board	N/O	Boss - single side	5.3×8.3×6.5	●	●	●	5
SPVQ810704		1	1	1±0.5N	For Lead	N/O	Boss - single side	5.3×8.3×6.5	●	●	●	6
SPVQ810802		1	1	1±0.5N	For Lead	N/O	Boss - both sides	5.3×8.3×6.5	●	●	●	7
SPVQ811006		1	1	1±0.5N	Press-fit (normal type)	N/O	Boss - single side	5.3×8.3×6.5	●	●	●	8
SPVQ820102		1	1	1±0.5N	For PC board	N/C	Boss - both sides	5.3×8.3×6.5	●	●	●	9
SPVQ820302		1	1	1±0.5N	Angle	N/C	Boss - single side	5.3×8.3×6.5	●	●	●	10
SPVQ820402		1	1	1±0.5N	Angle	N/C	Without boss	5.3×8.3×6.5	●	●	●	11
SPVQ820502		1	1	1±0.5N	For PC board	N/C	Without boss	5.3×8.3×6.5	●	●	●	12
SPVQ820602		1	1	1±0.5N	For PC board	N/C	Boss - single side	5.3×8.3×6.5	●	●	●	13
SPVQ820705		1	1	1±0.5N	For Lead	N/C	Boss - single side	5.3×8.3×6.5	●	●	●	14
SPVQ820802		1	1	1±0.5N	For Lead	N/C	Boss - both sides	5.3×8.3×6.5	●	●	●	15
SPVQ821006		1	1	1±0.5N	Press-fit (normal type)	N/C	Boss - single side	5.3×8.3×6.5	●	●	●	16
SPVQ850101		1	1	1±0.5N	With wire (Downwards)	N/O	Boss - single side	5.3×8.3×6.5	●	●	●	17
SPVQ850201		1	1	1±0.5N	With wire (Downwards)	N/O	Boss - both sides	5.3×8.3×6.5	●	●	●	18
SPVQ850301		1	1	1±0.5N	With wire (Left side)	N/O	Boss - single side	5.3×8.3×6.5	●	●	●	19
SPVQ850501		1	1	1±0.5N	With wire (from side)	N/O	Boss - both sides	5.3×8.3×6.5	●	●	●	20
SPVQ860101		1	1	1±0.5N	With wire (Downwards)	N/C	Boss - single side	5.3×8.3×6.5	●	●	●	21
SPVQ860200		1	1	1±0.5N	With wire (Downwards)	N/C	Boss - both sides	5.3×8.3×6.5	●	●	●	22
SPVQ860301		1	1	1±0.5N	With wire (Left side)	N/C	Boss - single side	5.3×8.3×6.5	●	●	●	23
SPVQ860500		1	1	1±0.5N	With wire (from side)	N/C	Boss - both sides	5.3×8.3×6.5	●	●	●	24

Water-proof Type

SPVQ8 Series

Products No.	Type	Poles	Positions	Operating force	Terminal type	Circuit	Main body form	Dimensions (W×D×H) (mm)	Water-proof	Dust-proof	Automotive	Drawing No.
SPVQ811502	Standard type	1	1	1±0.5N	Press-fit (Short type)	N/O	Boss - single side	5.3×8.3×6.5	●	●	●	25
SPVQ821500		1	1	1±0.5N	Press-fit (Short type)	N/C	Boss - single side	5.3×8.3×6.5	●	●	●	26
SPVQ812600		1	1	3N max.	For Lead	N/O	Boss - right side	5.3×8.3×6.5	●	●	●	27
SPVQ812400		1	1	3N max.	Press-fit (normal type)	N/O	Boss - right side	5.3×8.3×6.5	●	●	●	28
SPVQ812200		1	1	3N max.	Press-fit (Short type)	N/O	Boss - right side	5.3×8.3×6.5	●	●	●	29
SPVQ812700		1	1	3N max.	For Lead	N/O	Boss - left side	5.3×8.3×6.5	●	●	●	30
SPVQ812500		1	1	3N max.	Press-fit (normal type)	N/O	Boss - left side	5.3×8.3×6.5	●	●	●	31
SPVQ812300		1	1	3N max.	Press-fit (Short type)	N/O	Boss - left side	5.3×8.3×6.5	●	●	●	32
SPVQ822500		1	1	3N max.	For Lead	N/C	Boss - right side	5.3×8.3×6.5	●	●	●	33
SPVQ822300		1	1	3N max.	Press-fit (normal type)	N/C	Boss - right side	5.3×8.3×6.5	●	●	●	34
SPVQ822100		1	1	3N max.	Press-fit (Short type)	N/C	Boss - right side	5.3×8.3×6.5	●	●	●	35
SPVQ822600		1	1	3N max.	For Lead	N/C	Boss - left side	5.3×8.3×6.5	●	●	●	36
SPVQ822400		1	1	3N max.	Press-fit (normal type)	N/C	Boss - left side	5.3×8.3×6.5	●	●	●	37
SPVQ822200		1	1	3N max.	Press-fit (Short type)	N/C	Boss - left side	5.3×8.3×6.5	●	●	●	38
SPVQ830102	Long life type	1	1	1±0.5N	For PC board	N/O	Boss - both sides	5.3×8.3×6.5	●	●	●	39
SPVQ830302		1	1	1±0.5N	Angle	N/O	Boss - single side	5.3×8.3×6.5	●	●	●	40
SPVQ830402		1	1	1±0.5N	Angle	N/O	Without boss	5.3×8.3×6.5	●	●	●	41
SPVQ830502		1	1	1±0.5N	For PC board	N/O	Without boss	5.3×8.3×6.5	●	●	●	42
SPVQ830602		1	1	1±0.5N	For PC board	N/O	Boss - single side	5.3×8.3×6.5	●	●	●	43
SPVQ830702		1	1	1±0.5N	For Lead	N/O	Boss - single side	5.3×8.3×6.5	●	●	●	44
SPVQ830802		1	1	1±0.5N	For Lead	N/O	Boss - both sides	5.3×8.3×6.5	●	●	●	45
SPVQ831002		1	1	1±0.5N	Press-fit (normal type)	N/O	Boss - single side	5.3×8.3×6.5	●	●	●	46
SPVQ8R02	Normal type With internal resistor type	1	1	1±0.5N	For PC board	—	Boss - single side	5.3×8.3×6.5	●	●	●	47
SPVQ8R06		1	1	1±0.5N	Press-fit (normal type)	—	Boss - single side	5.3×8.3×6.5	●	●	●	48
SPVQ8R01		1	1	1±0.5N	Press-fit (Short type)	—	Boss - single side	5.3×8.3×6.5	●	●	●	49

⚠Note

1. This catalog shows only outline specifications. When using the products, please obtain formal specifications for supply.
2. Unless specified, the length of the lead wire is 250mm. Color is either red or black. For length modification, please contact us.
3. Please specify circuits (N.O. or N.C.) for wired (side) types. Unless specified, the circuit will apply N.O.
4. This unit cannnot be used in water (IP6K7 rating, except for terminal).
5. Please place purchase orders per minimum order unit (integer).
6. This products can be used in vehicles.
   Although these products are designed to perform over a wide operating temperature range, please ensure that you receive and read the formal delivery specifications before use.

Water-proof Type

SPVQ8 Series

■ Packing Specifications

Tray

Products No.	Number of packages(pcs.)		Export package measurements (mm)
	1 case / Japan	1 case / export packing	
SPVQ810102 SPVQ810302 SPVQ810402 SPVQ810502 SPVQ810602 SPVQ810704 SPVQ810802 SPVQ811006 SPVQ820102 SPVQ820302 SPVQ820402 SPVQ820502 SPVQ820602 SPVQ820705 SPVQ820802 SPVQ821006 SPVQ811502 SPVQ821500 SPVQ830102 SPVQ830302 SPVQ830402 SPVQ830502 SPVQ830602 SPVQ830702 SPVQ830802 SPVQ831002 SPVQ8R02 SPVQ8R06 SPVQ8R01	1,755	7,020	540 x 360 x 270
SPVQ812600 SPVQ812400 SPVQ812200 SPVQ812700 SPVQ812500 SPVQ812300 SPVQ822500 SPVQ822300 SPVQ822100 SPVQ822600 SPVQ822400 SPVQ822200	1,080	4,320	540 x 360 x 270

Bulk

Products No.	Number of packages(pcs.)		Export package measurements (mm)
	1 case / Japan	1 case / export packing	
SPVQ850101 SPVQ850201 SPVQ850301 SPVQ850501 SPVQ860101 SPVQ860200 SPVQ860301 SPVQ860500	400	1,600	555 x 375 x 223

Drawing No.1

■ Dimensions

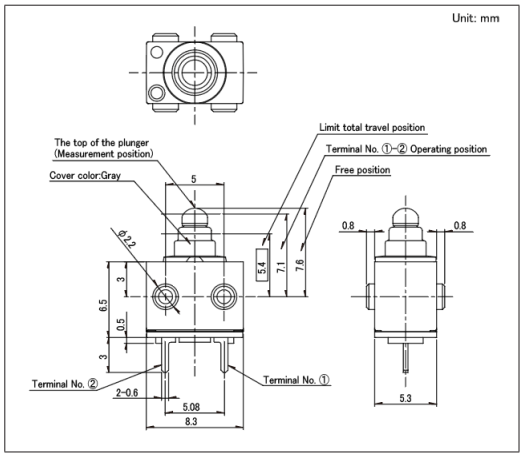

■ Circuit Diagram

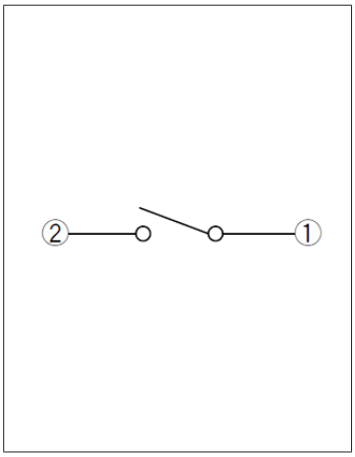

Drawing No.2

■ Dimensions

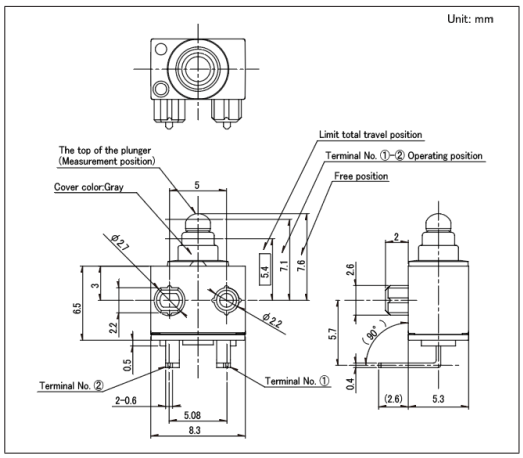

■ Circuit Diagram

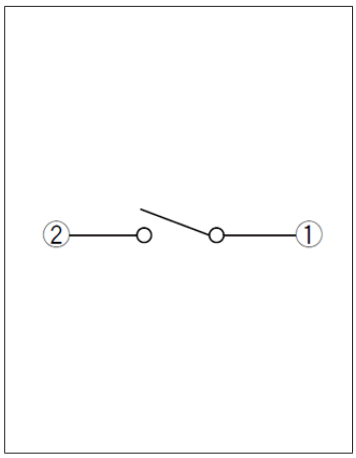

Drawing No.3

■ Dimensions

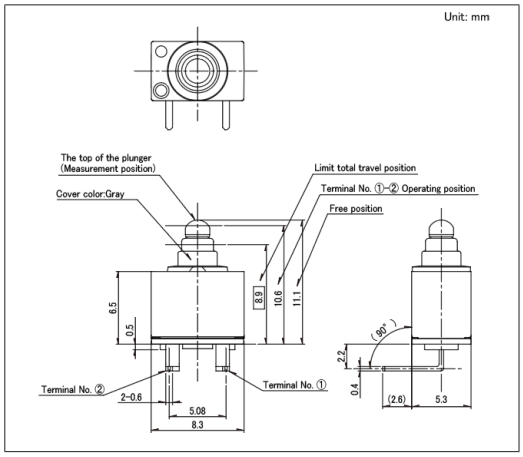

■ Circuit Diagram

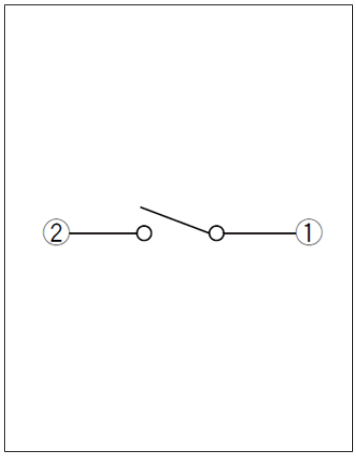

Drawing No.4

■ Dimensions

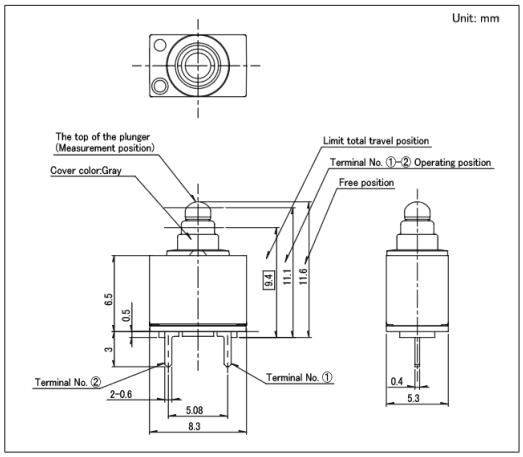

■ Circuit Diagram

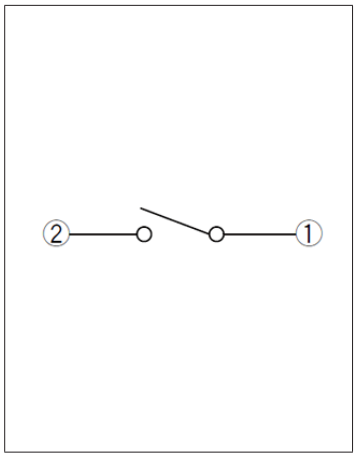

Drawing No.5

■ Dimensions

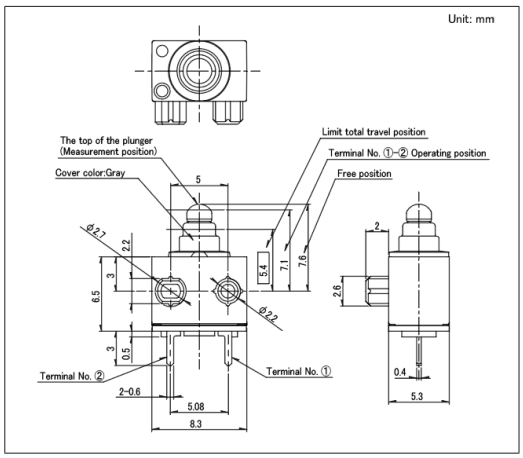

■ Circuit Diagram

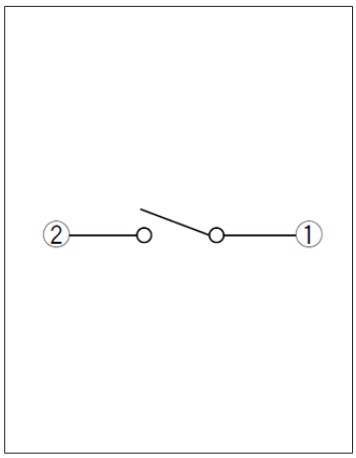

Drawing No.6

■ Dimensions

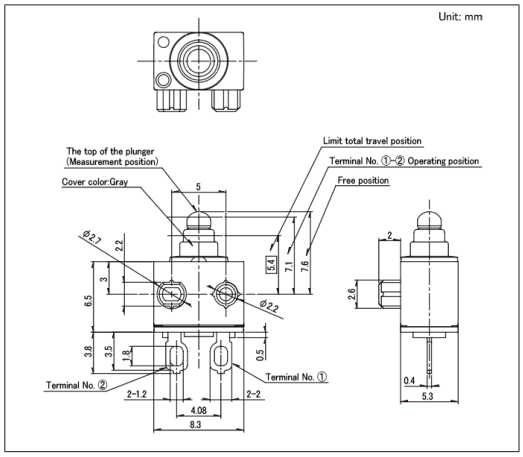

■ Circuit Diagram

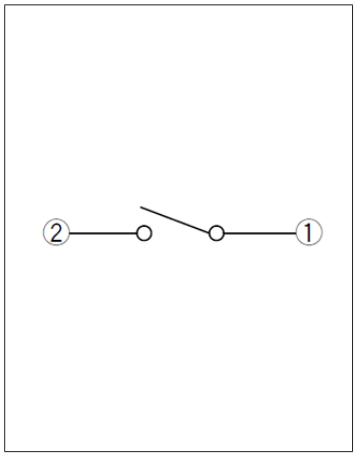

Drawing No.7

■ Dimensions

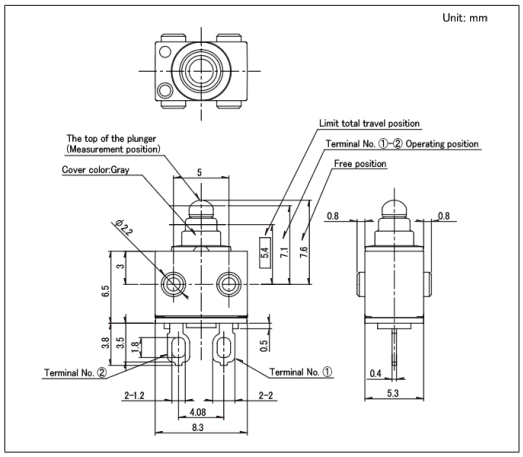

■ Circuit Diagram

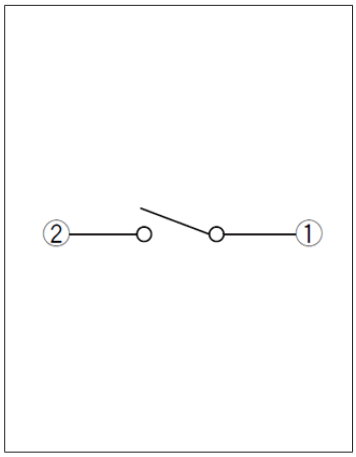

Drawing No.8

■ Dimensions

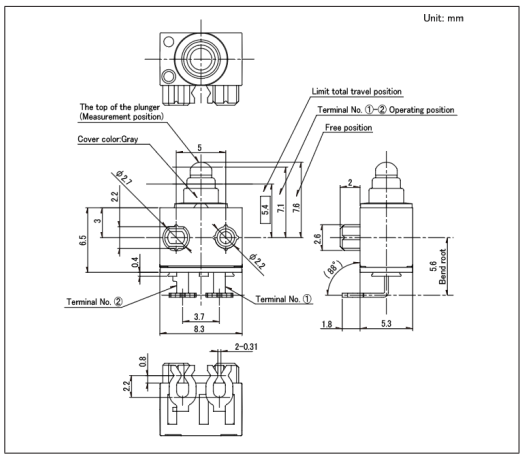

■ Circuit Diagram

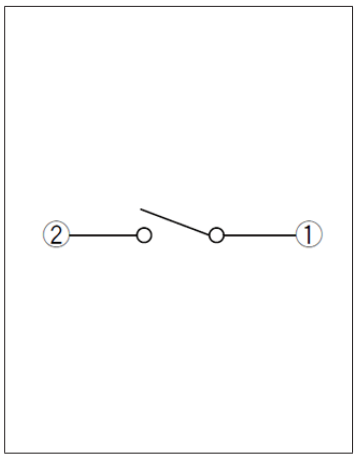

Drawing No.9

■ Dimensions

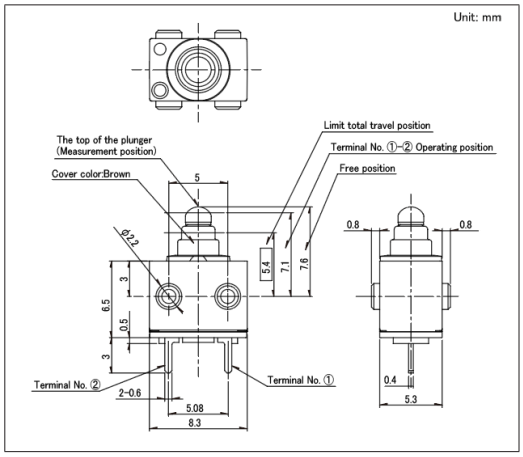

■ Circuit Diagram

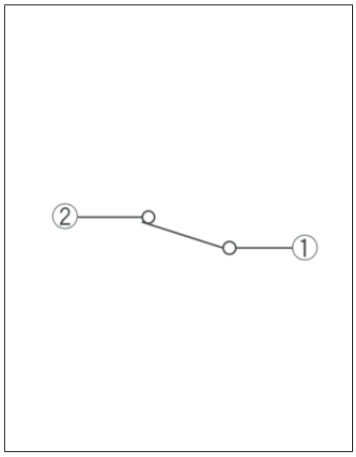

Drawing No.10

■ Dimensions

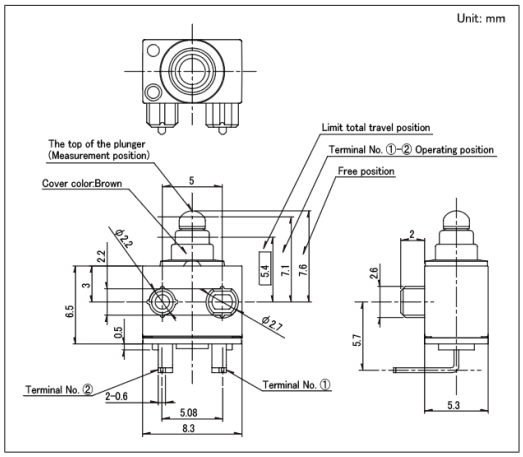

■ Circuit Diagram

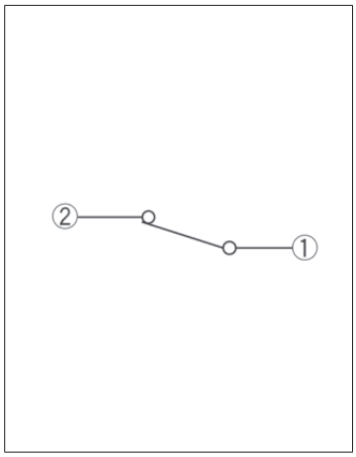

Drawing No.11

■ Dimensions

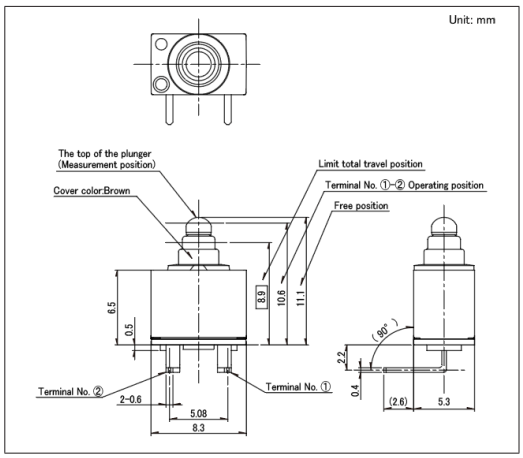

■ Circuit Diagram

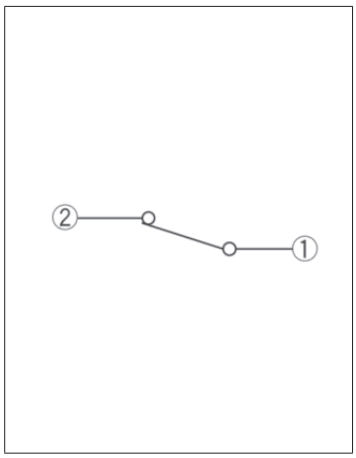

Drawing No.12

■ Dimensions

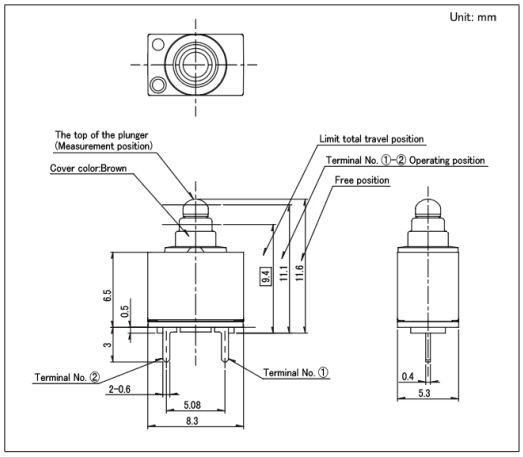

■ Circuit Diagram

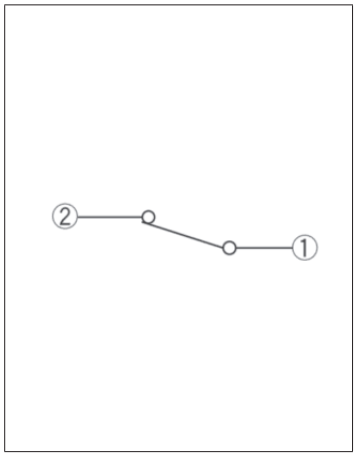

Drawing No.13

■ Dimensions

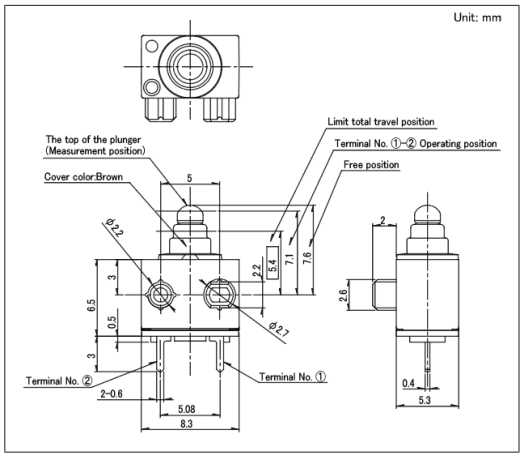

■ Circuit Diagram

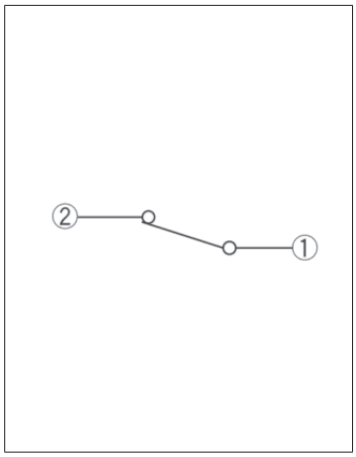

Drawing No.14

■ Dimensions

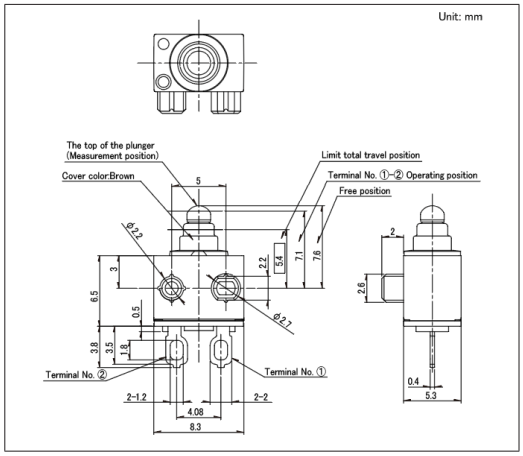

■ Circuit Diagram

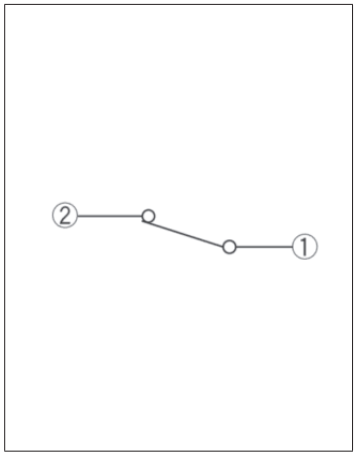

Drawing No.15

■ Dimensions

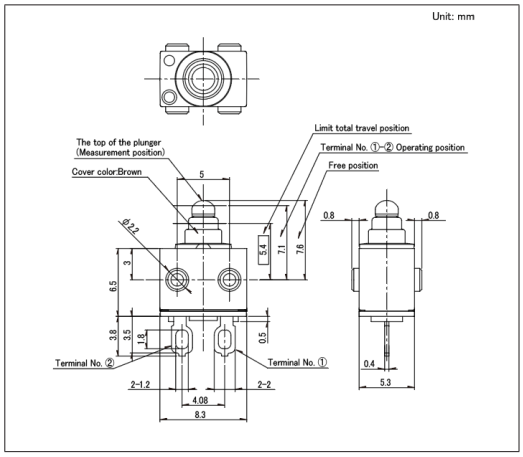

■ Circuit Diagram

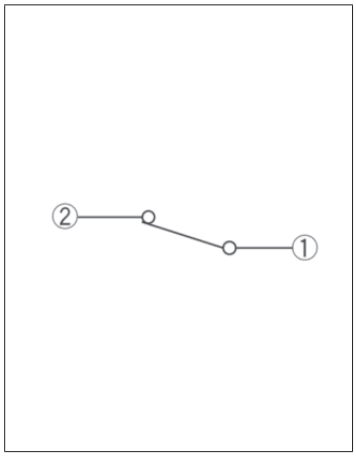

Drawing No.16

■ Dimensions

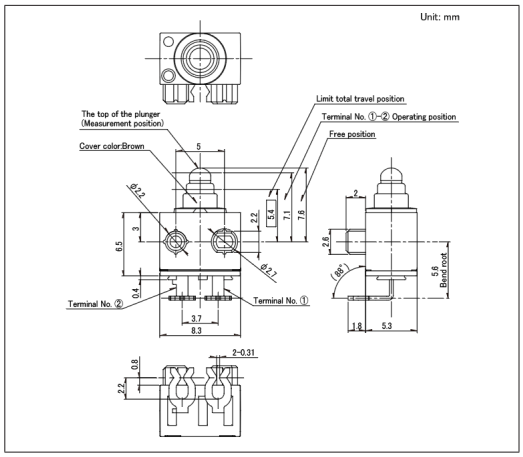

■ Circuit Diagram

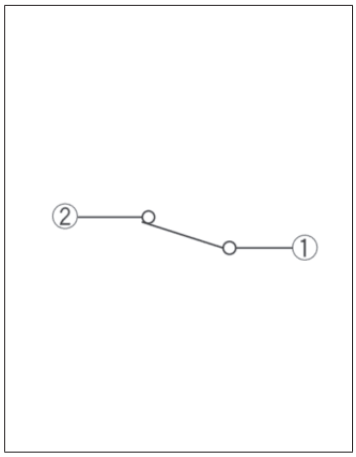

Drawing No.17

■ Dimensions

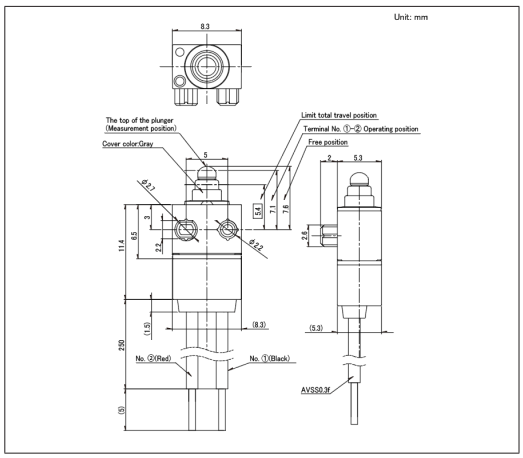

■ Circuit Diagram

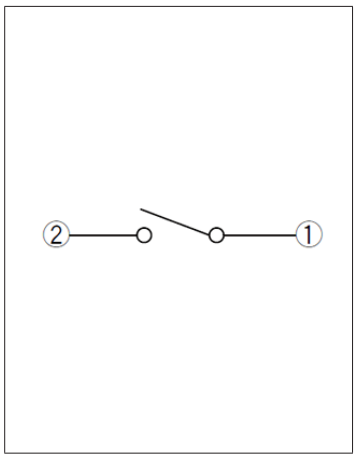

Drawing No.18

■ Dimensions

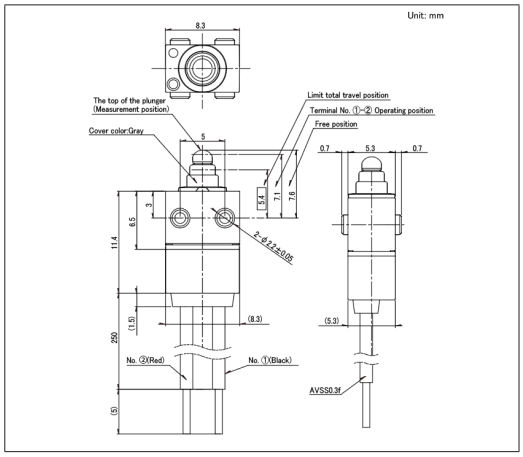

■ Circuit Diagram

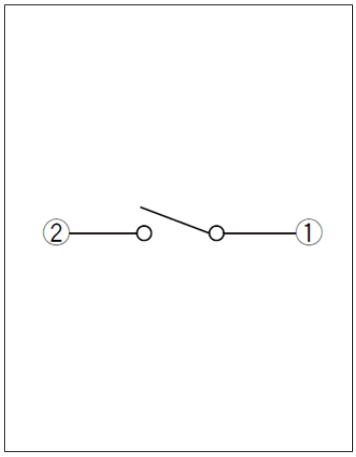

Drawing No.19

■ Dimensions

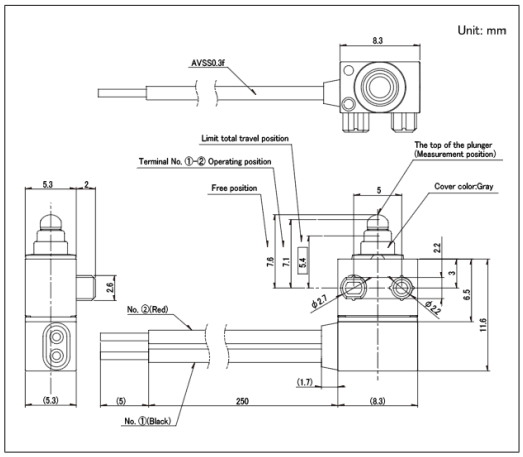

■ Circuit Diagram

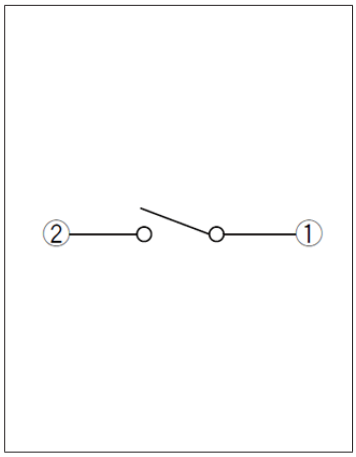

Drawing No.20

■ Dimensions

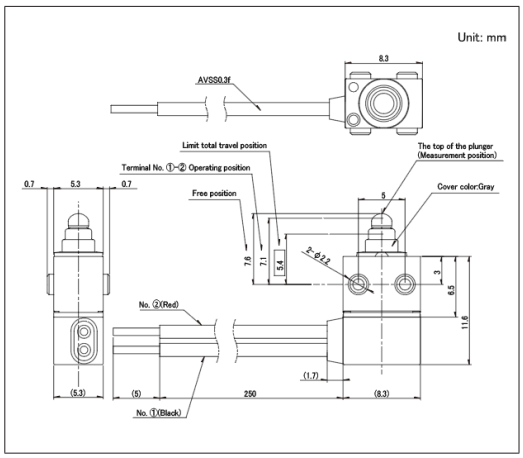

■ Circuit Diagram

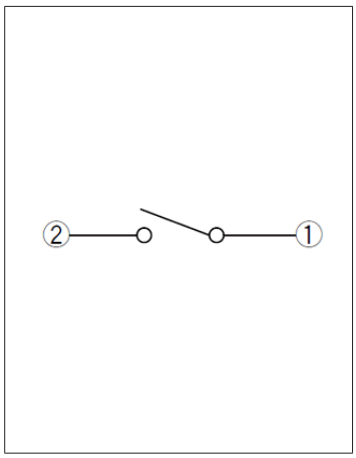

Drawing No.21

■ Dimensions

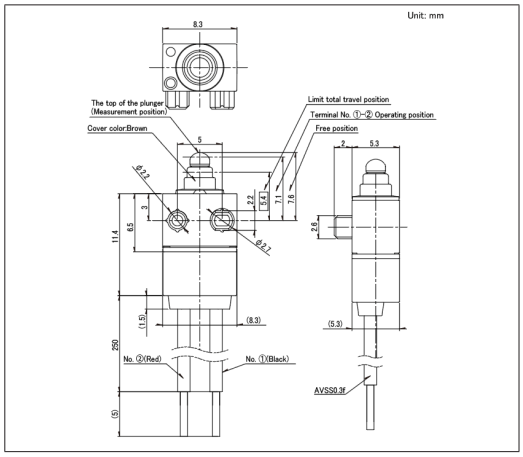

■ Circuit Diagram

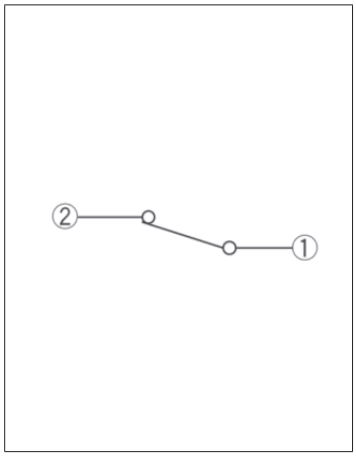

Drawing No.22

■ Dimensions

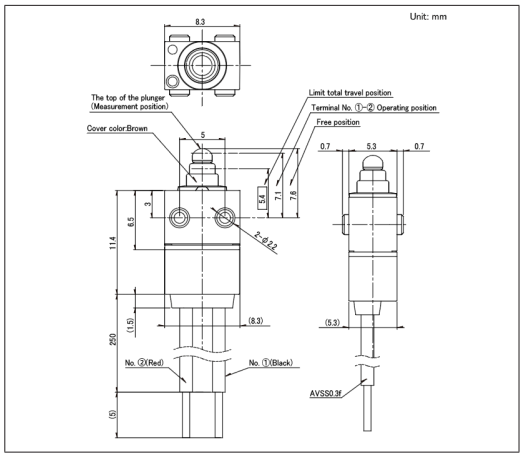

■ Circuit Diagram

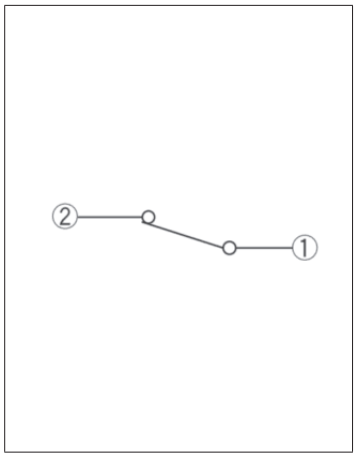

Drawing No.23

■ Dimensions

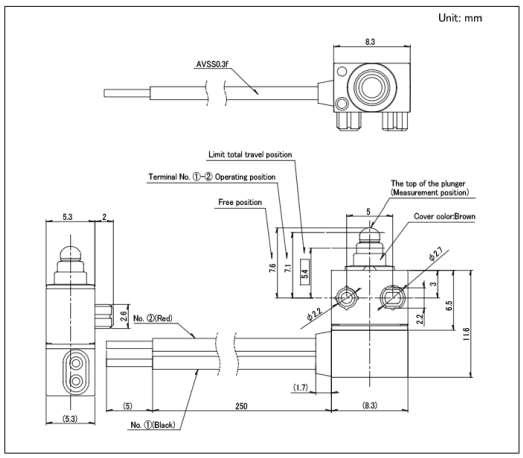

■ Circuit Diagram

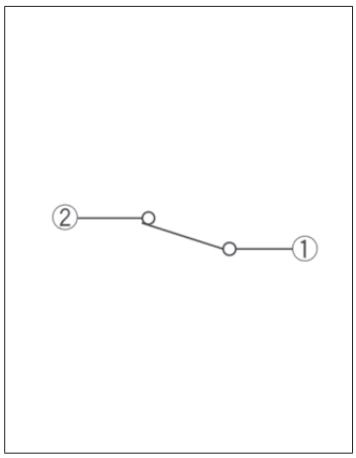

Drawing No.24

■ Dimensions

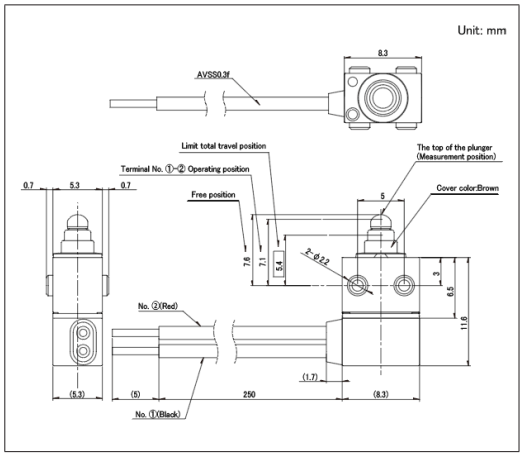

■ Circuit Diagram

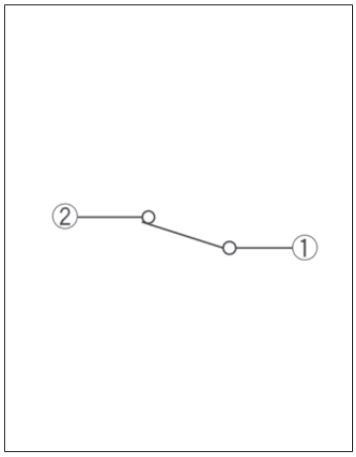

Drawing No.25

■ Dimensions

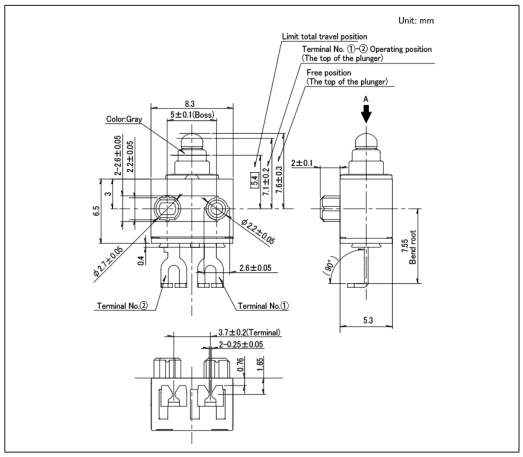

■ Circuit Diagram

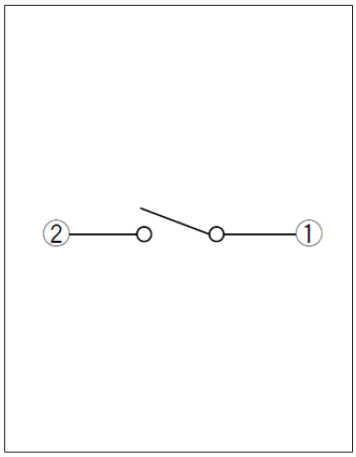

Drawing No.26

■ Dimensions

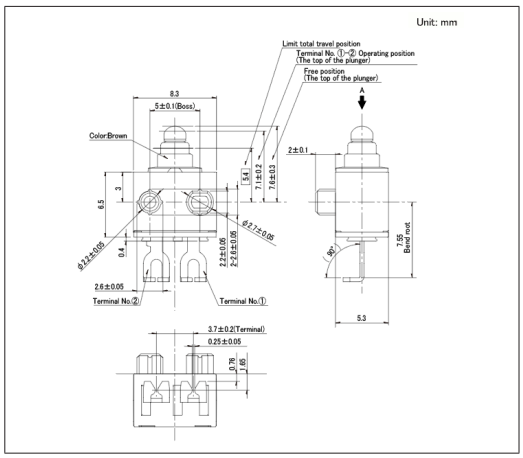

■ Circuit Diagram

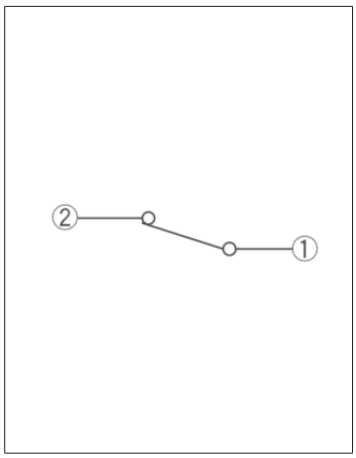

Drawing No.27

■ Dimensions

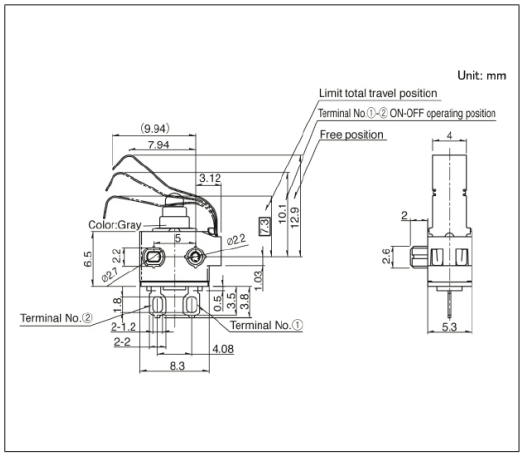

■ Circuit Diagram

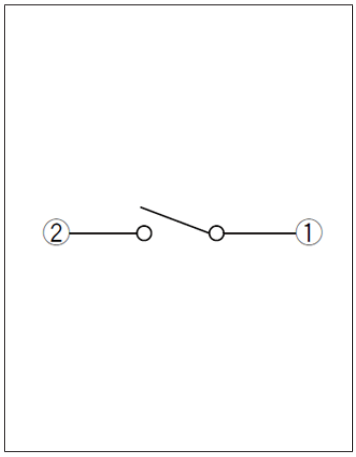

Drawing No.28

■ Dimensions

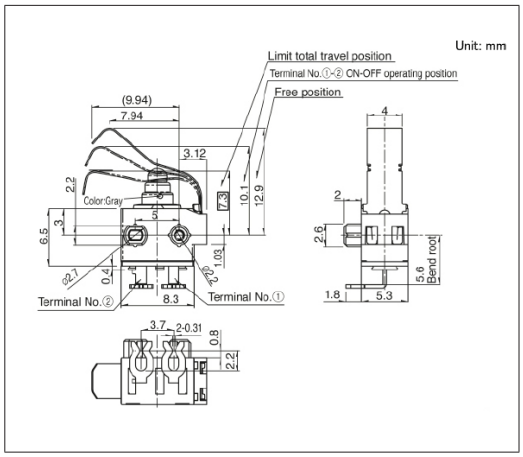

■ Circuit Diagram

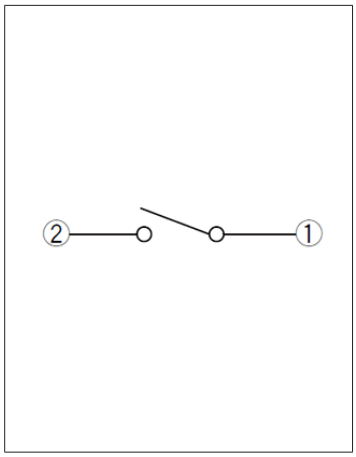

Drawing No.29

■ Dimensions

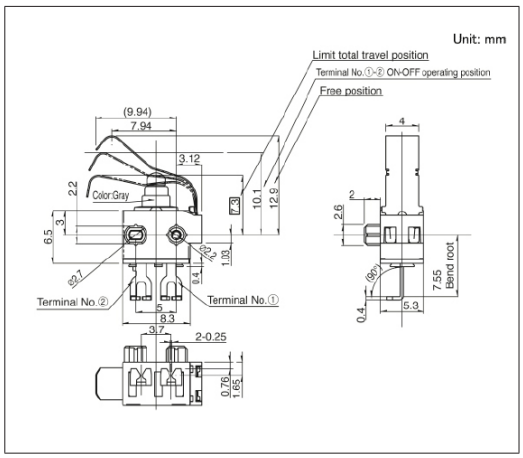

■ Circuit Diagram

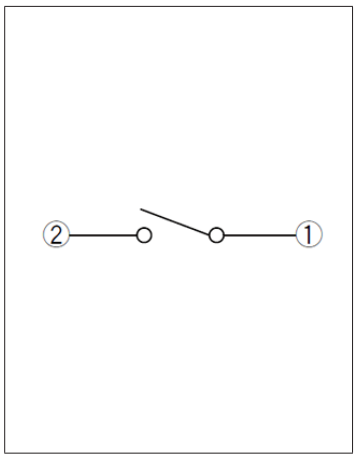

Drawing No.30

■ Dimensions

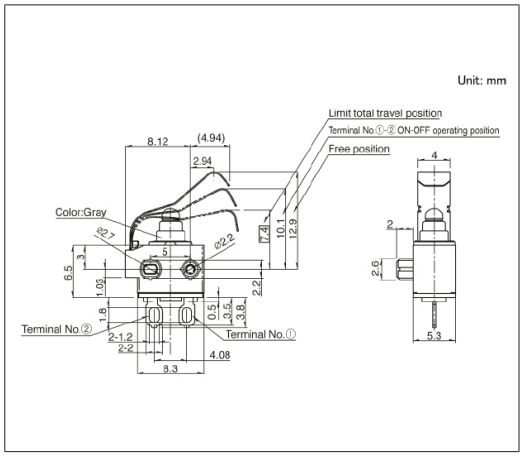

■ Circuit Diagram

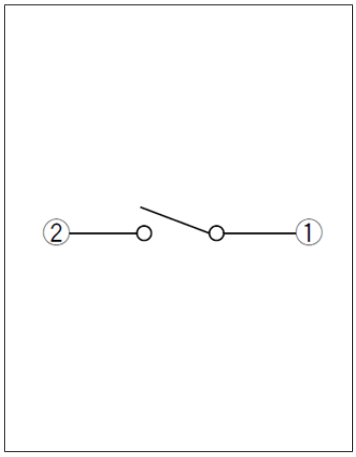

Drawing No.31

■ Dimensions

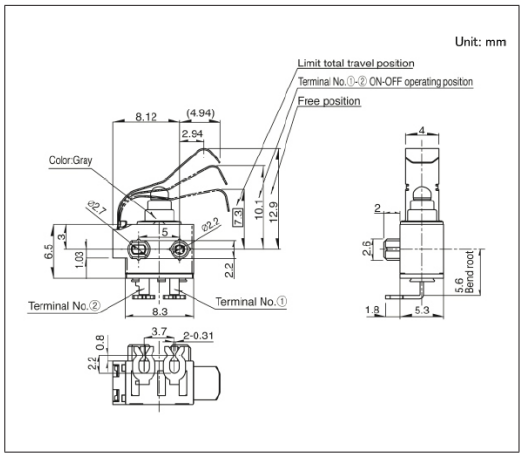

■ Circuit Diagram

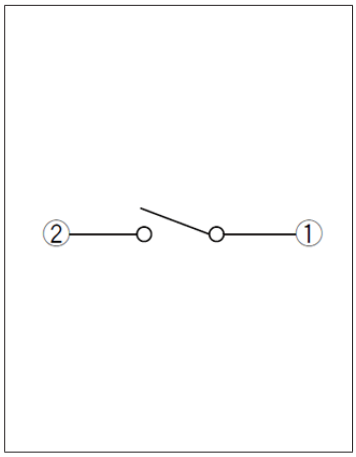

Drawing No.32

■ Dimensions

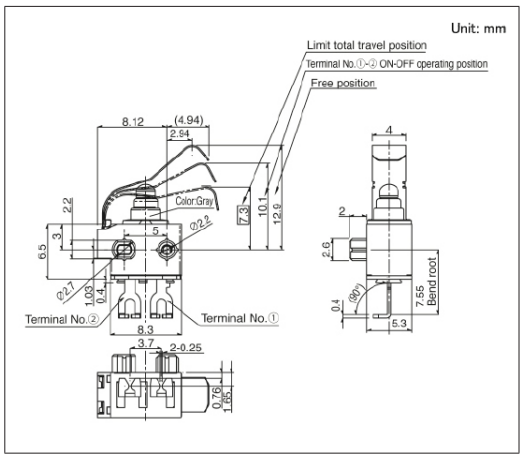

■ Circuit Diagram

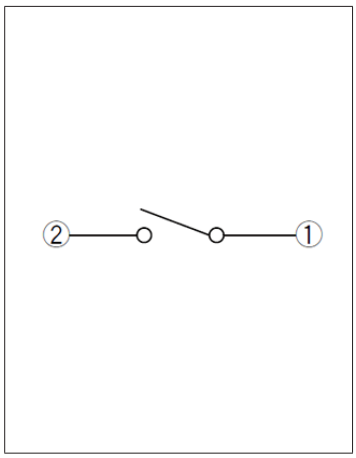

Drawing No.33

■ Dimensions

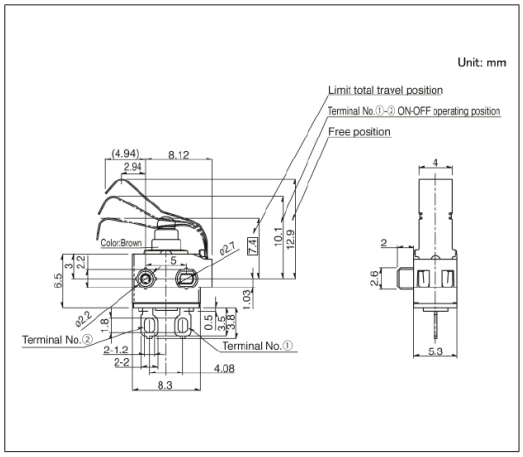

■ Circuit Diagram

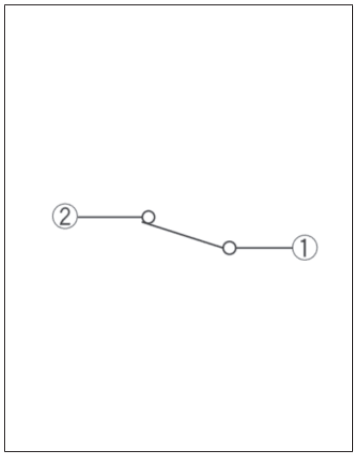

Drawing No.34

■ Dimensions

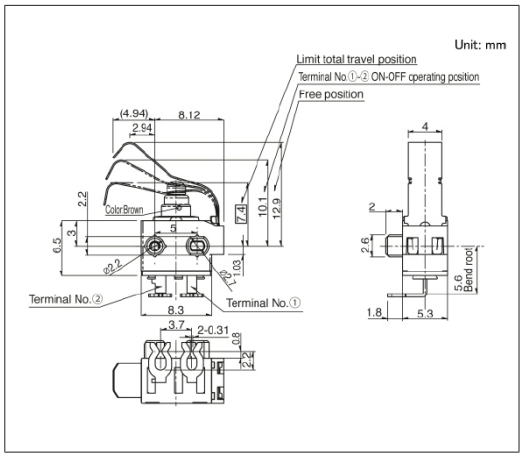

■ Circuit Diagram

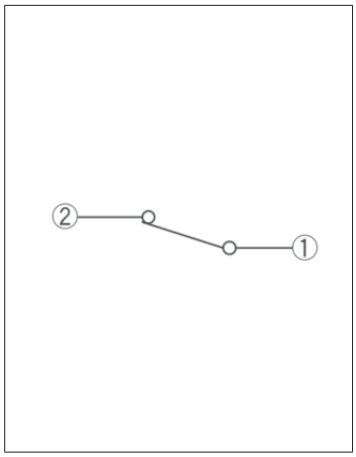

Drawing No.35

■ Dimensions

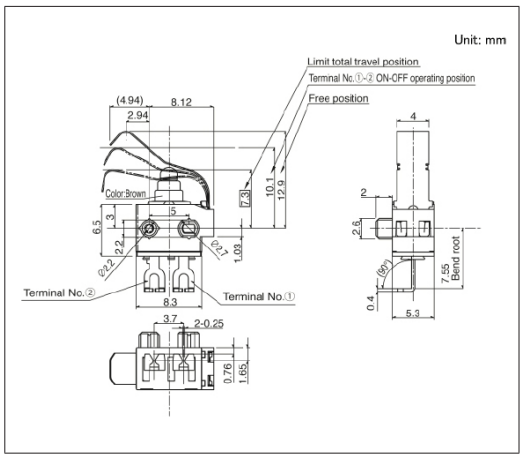

■ Circuit Diagram

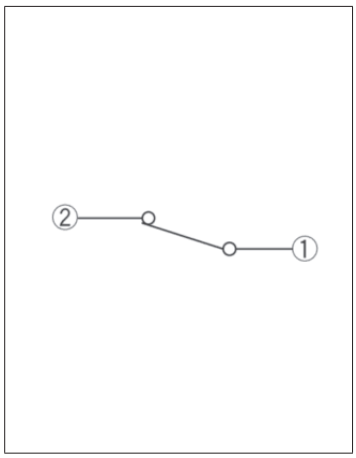

Drawing No.36

■ Dimensions

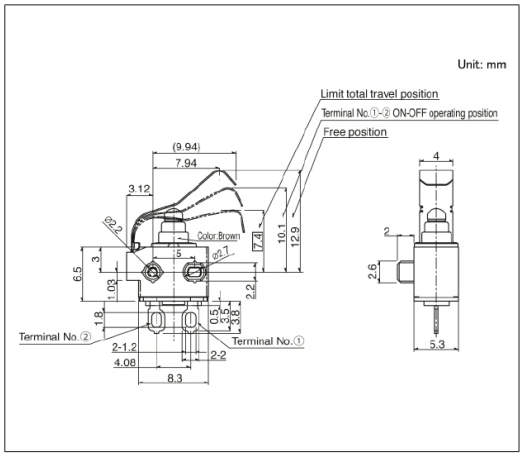

■ Circuit Diagram

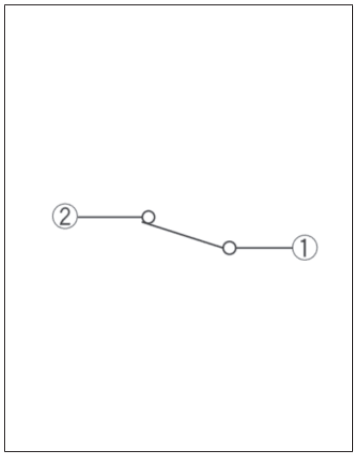

Drawing No.37

■ Dimensions

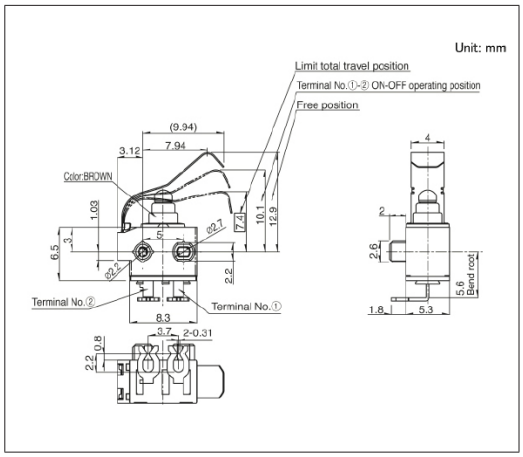

■ Circuit Diagram

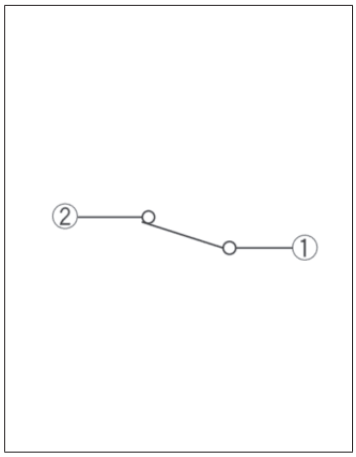

Water-proof Type

SPVQ8 Series

Drawing No.38

■ Dimensions

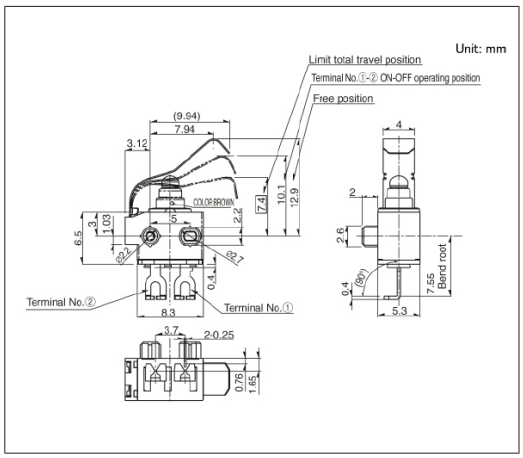

■ Circuit Diagram

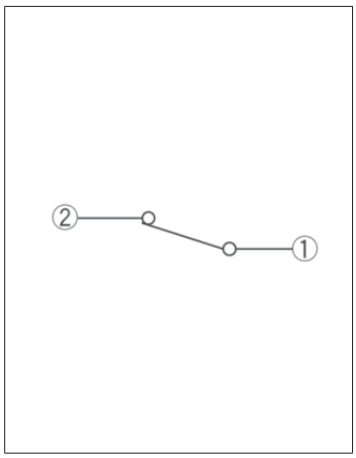

Drawing No.39

■ Dimensions

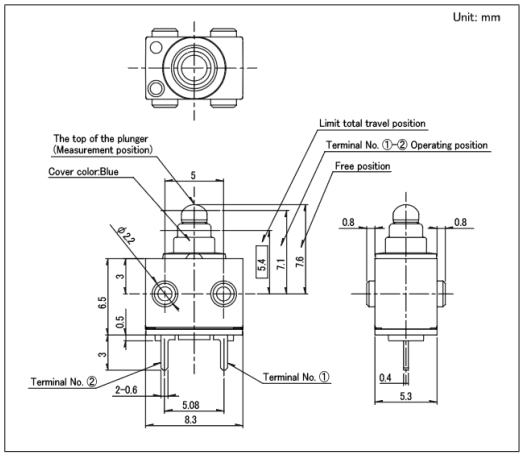

■ Circuit Diagram

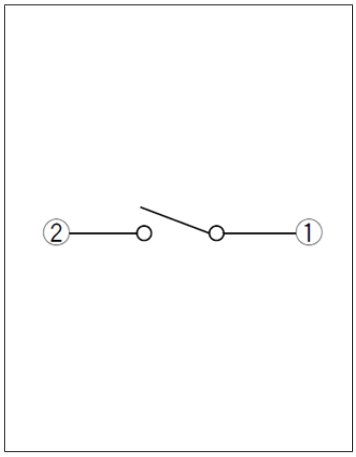

Drawing No.40

■ Dimensions

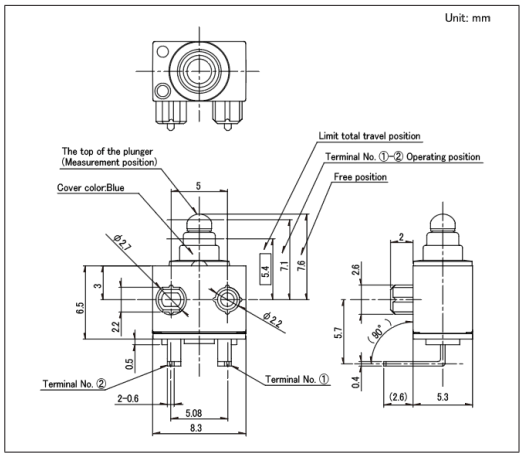

■ Circuit Diagram

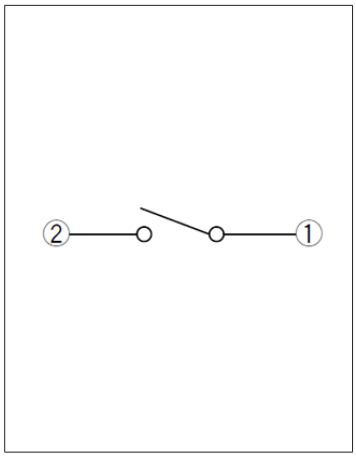

Drawing No.41

■ Dimensions

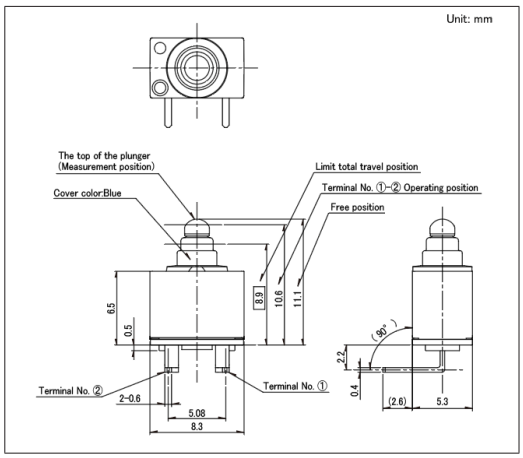

■ Circuit Diagram

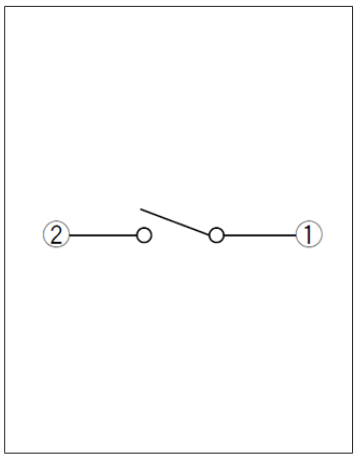

Drawing No.42

■ Dimensions

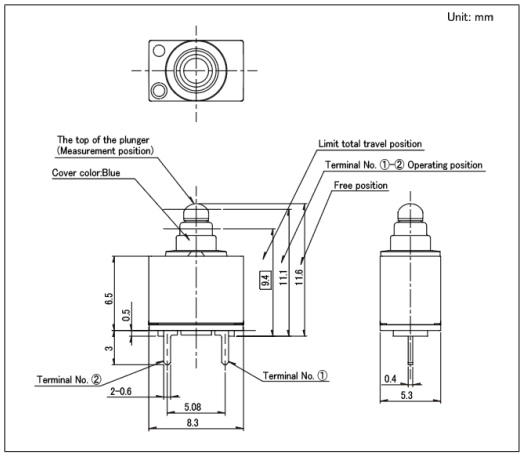

■ Circuit Diagram

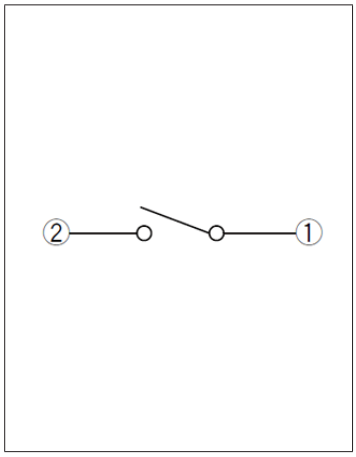

Drawing No.43

■ Dimensions

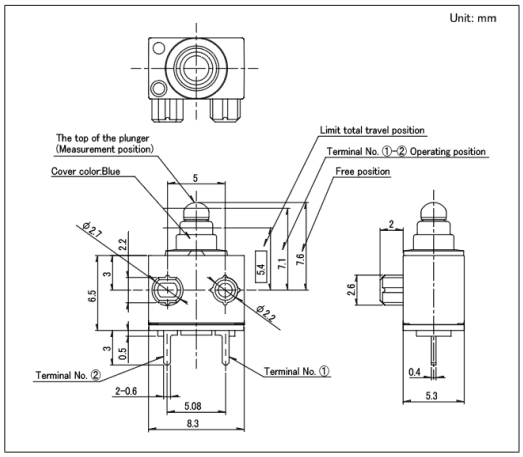

■ Circuit Diagram

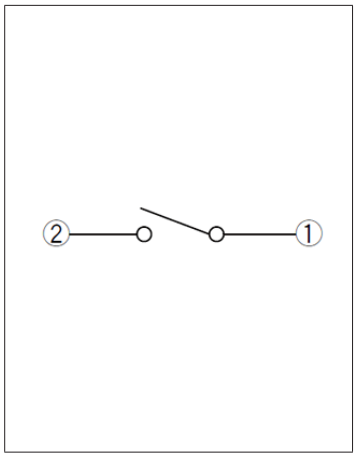

Drawing No.44

■ Dimensions

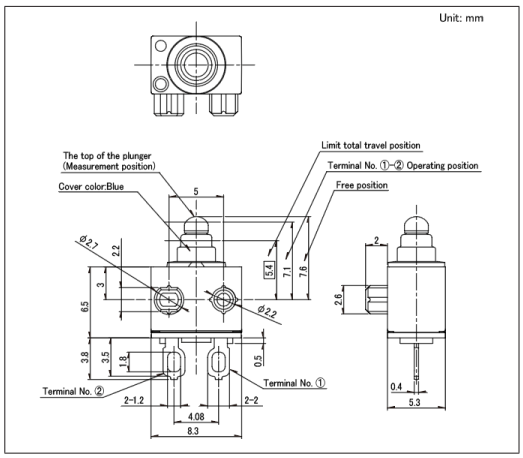

■ Circuit Diagram

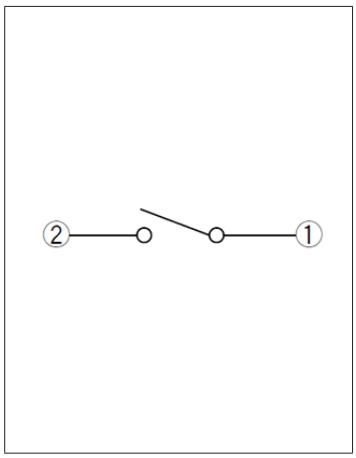

Drawing No.45

■ Dimensions

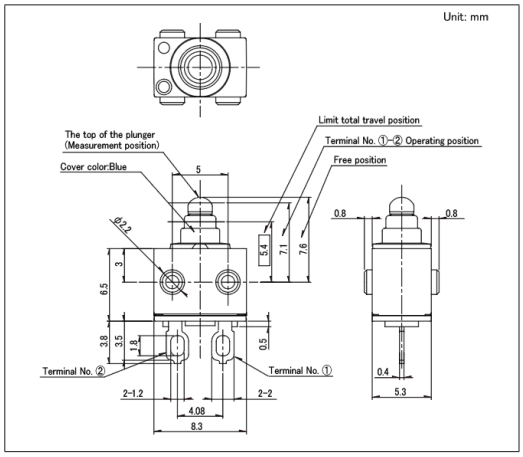

■ Circuit Diagram

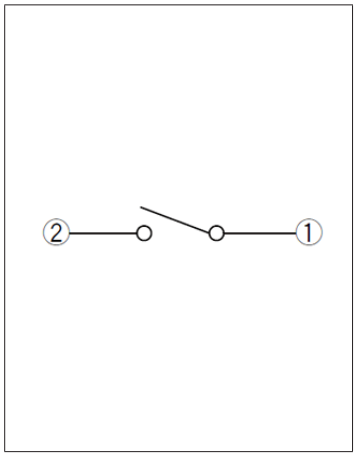

Drawing No.46

■ Dimensions

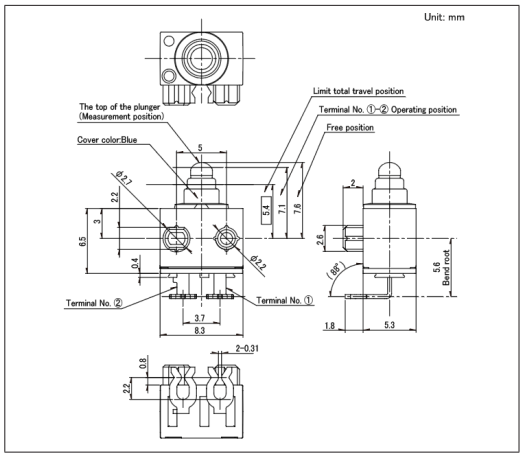

■ Circuit Diagram

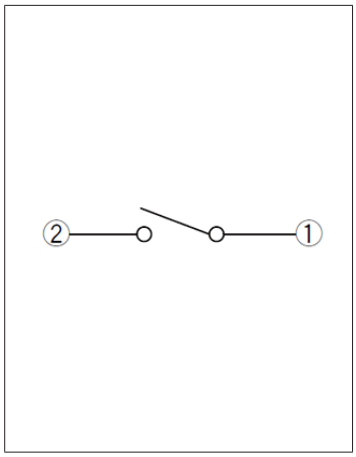

Drawing No.47

■ Dimensions

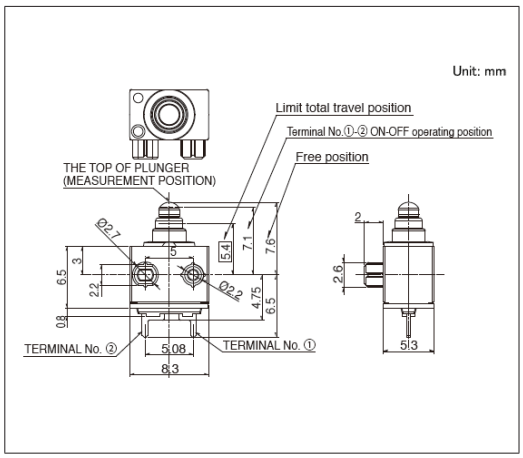

■ Circuit Diagram

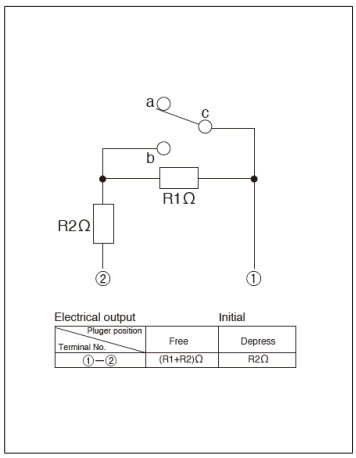

Please contact us for resistance specifications and rated power.

Drawing No.48

■ Dimensions

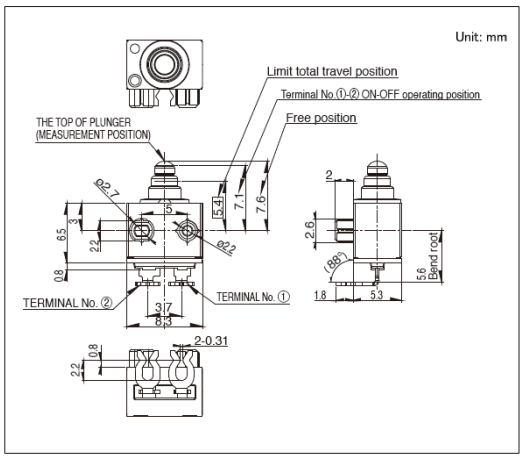

■ Circuit Diagram

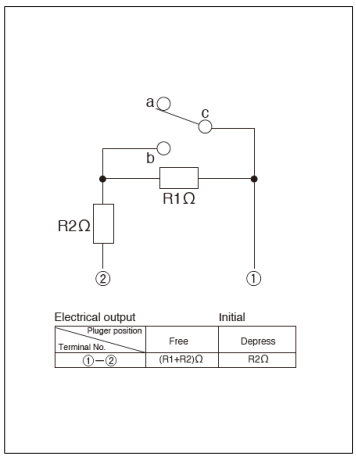

Please contact us for resistance specifications and rated power.

Drawing No.49

■ Dimensions

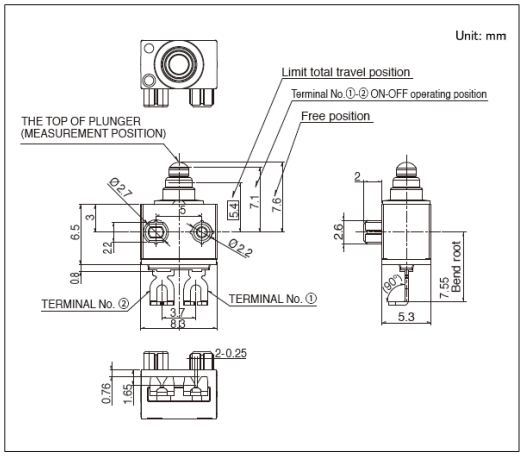

■ Circuit Diagram

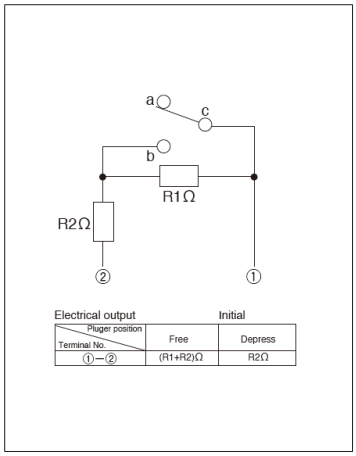

Please contact us for resistance specifications and rated power.

Water-proof Type
SPVQ8H Series

Enhanced robustness with a wire pull strength of 110N.

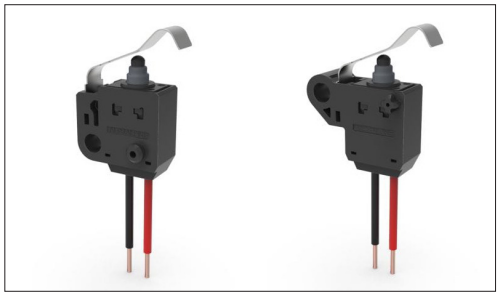

Automotive | Water-proof Type | Dust-proof Type

- Rating(max.)/(min.)(Resistive load):0.1A 16V DC/50μA 5V DC
- Contact resistance(Initial/After operating life):500mΩ max./1Ω max.
- Operating life without load:100,000cycles
- Operating life with load Rating(max.)(Resistive load):
  100,000cycles 1Ω max.

Applications:Energy_Industrial:Robots, drones,Industrial equipment
Home:Major home appliances
Automotive:Hood Latch (Side/Rear/Door/Gear)

■ Product List

Products No.	Poles	Positions	Operating force	Operation part shape	Terminal type	Circuit	Main body form	Dimensions (W×D×H) (mm)	Water-proof	Dust-proof	Automotive	Drawing No.
SPVQ8H0100	1	1	4.7N max.	Actuator	With wire (Downwards)	N/O	With a screw hole (Type A)	6.45×14.8×14.5	●	●	●	1
SPVQ8H0200	1	1	4.7N max.	Actuator	With wire (Downwards)	N/O	With a screw hole (Type B)	6.45×17.95×14.5	●	●	●	2

⚠Note

1. This catalog shows only outline specifications. When using the products, please obtain formal specifications for supply.
2. Unless specified, the length of the lead wire is 250mm. Color is either red or black. For length modification, please contact us.
3. Prduct with wire will be build-to-order.
4. This unit cannnot be used in water (IP6K7 rating, except for terminal).
5. Place your purchase order in N minimum package units (N: integer).
6. This products can be used in vehicles.
   Although these products are designed to perform over a wide operating temperature range, please ensure that you receive and read the formal delivery specifications before use.

■ Packing Specifications

Bulk

Number of packages(pcs.)		Export package measurements (mm)
1 case / Japan	1 case / export packing	
300	300	360 x 360 x 290

Drawing No.1

■ Dimensions

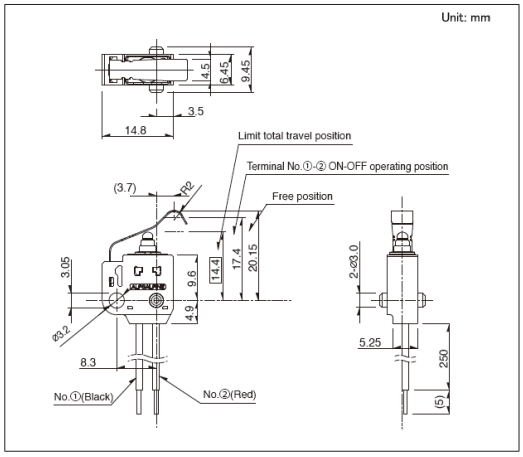

■ Circuit Diagram

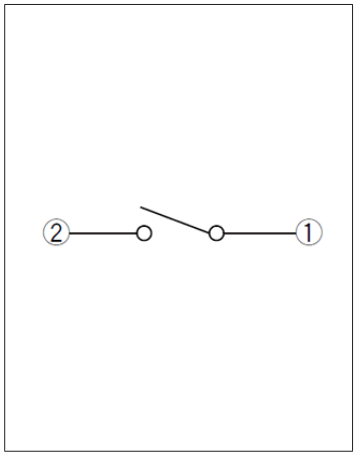

Drawing No.2

■ Dimensions

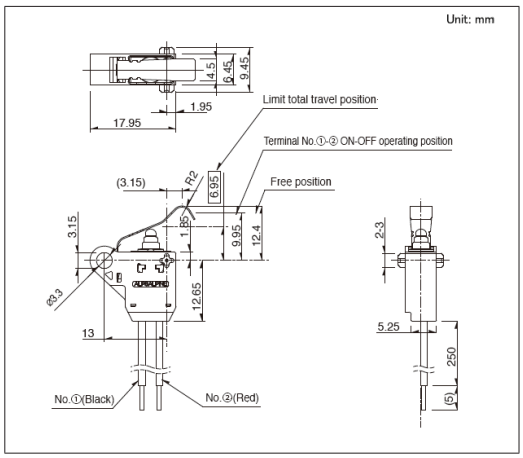

■ Circuit Diagram

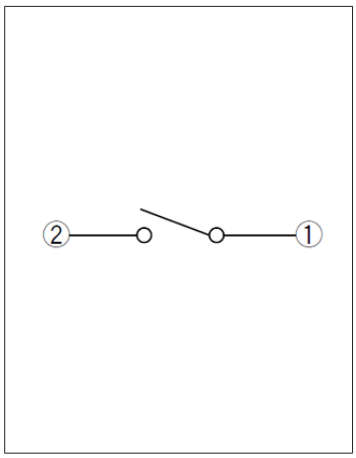

Water-proof Type
SPVQ9 Series

Delivers stable contact independent of operating position or speed with a dual-circuit simultaneous switching design.

Automotive | Water-proof Type | Dust-proof Type

- Rating(max.)/(min.)(Resistive load):50mA 26V DC/50μA 5V DC
- Contact resistance(Initial/After operating life):75mΩ max./200mΩ max.
- Operating life without load:300,000 cycles
- Operating life with load Rating(max.)(Resistive load):
  300,000 cycles 200mΩ max.

Applications:Home:Major home appliances
Automotive:Electric Parking Brake

■ Product List

Products No.	Poles	Positions	Operating force	Changeover timing	Operation part shape	Terminal type	Dimensions (W×D×H) (mm)	Water-proof	Dust-proof	Automotive	Drawing No.
SPVQ910205	2	2	1±0.5N	Non shorting	Push	For PC board	8.4×15.4×7.5	●	●	●	1

⚠Note

1. This catalog shows only outline specifications. When using the products, please obtain formal specifications for supply.
2. This unit cannnot be used in water (IP6K7 rating, except for terminal).
3. Please place purchase orders per minimum order unit (integer).
4. This products can be used in vehicles.
   Although these products are designed to perform over a wide operating temperature range, please ensure that you receive and read the formal delivery specifications before use.

■ Packing Specifications

Tray

Number of packages(pcs.)		Export package measurements (mm)
1 case / Japan	1 case / export packing	
1,500	6,000	540 x 360 x 270

Drawing No.1

■ Dimensions

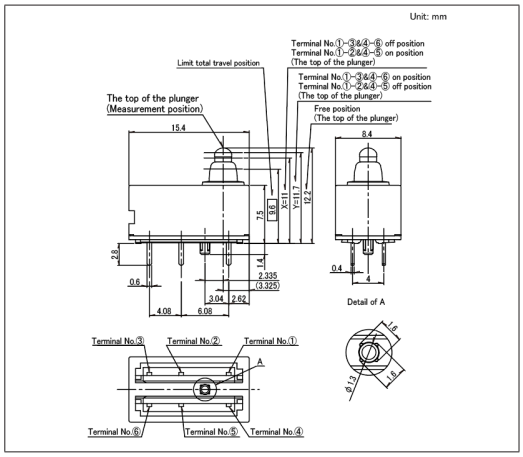

■ Circuit Diagram

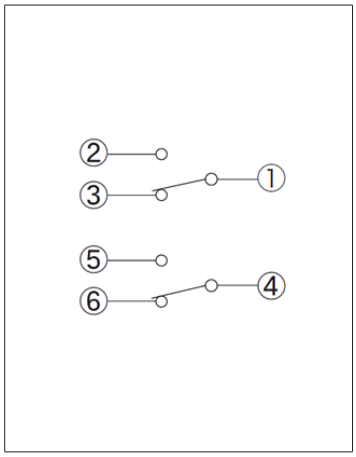

Water-proof Type
SPVQA Series

Supports solderless connection with fork terminals.

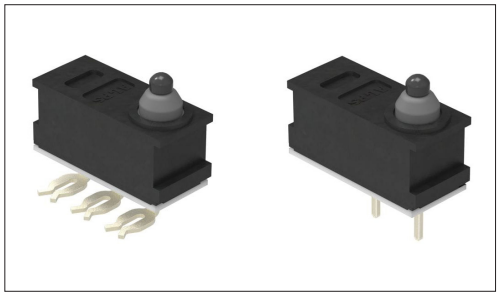

Automotive | Water-proof Type | Dust-proof Type

- Rating(max.)/(min.)(Resistive load):0.1A 12V DC/50μA 5V DC
- Contact resistance(Initial/After operating life):500mΩ max./1Ω max.
- Operating life without load:300,000 cycles
- Operating life with load Rating(max.)(Resistive load):
  300,000 cycles 1Ω max.

Applications:Home:Major home appliances
Automotive:Hood Latch (Side/Rear/Door/Gear)

■ Product List

Products No.	Poles	Positions	Operating force	Changeover timing	Operation part shape	Terminal type	Main body form	Dimensions (W×D×H) (mm)	Water-proof	Dust-proof	Automotive	Drawing No.
SPVQA10103	1	1	1±0.5N	Non shorting	Push	Press-fit (Without terminal No.3)	Without boss L type	6.4×15.2×7.95	●	●	●	1
SPVQA10203	1	1	1±0.5N	Non shorting	Push	Press-fit (Without terminal No.3)	Without boss R type	6.4×15.2×7.95	●	●	●	2
SPVQA10302	1	1	1±0.5N	Non shorting	Push	Press-fit (Without terminal No.2)	Without boss L type	6.4×15.2×7.95	●	●	●	3
SPVQA10402	1	1	1±0.5N	Non shorting	Push	Press-fit (Without terminal No.2)	Without boss R type	6.4×15.2×7.95	●	●	●	4
SPVQA10504	1	2	1±0.5N	Non shorting	Push	Press-fit	Without boss L type	6.4×15.2×7.95	●	●	●	5
SPVQA10604	1	2	1±0.5N	Non shorting	Push	Press-fit	Without boss R type	6.4×15.2×7.95	●	●	●	6
SPVQA20103	1	1	1±0.5N	Non shorting	Push	For PC board (Without terminal No.3)	Without boss	6.4×15.2×7.95	●	●	●	7
SPVQA20203	1	2	1±0.5N	Non shorting	Push	For PC board	Without boss	6.4×15.2×7.95	●	●	●	8

⚠Note

1. This catalog shows only outline specifications. When using the products, please obtain formal specifications for supply.
2. This unit cannnot be used in water (IP6K7 rating, except for terminal).
3. Please place purchase orders per minimum order unit (integer).
4. This products can be used in vehicles.
   Although these products are designed to perform over a wide operating temperature range, please ensure that you receive and read the formal delivery specifications before use.

■ Packing Specifications

Tray

Number of packages(pcs.)		Export package measurements (mm)
1 case / Japan	1 case / export packing	
1,200	4,800	540 x 360 x 270

Drawing No.1

■ Dimensions

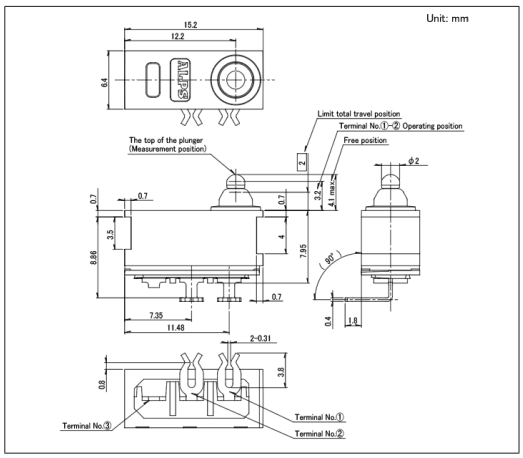

■ Circuit Diagram

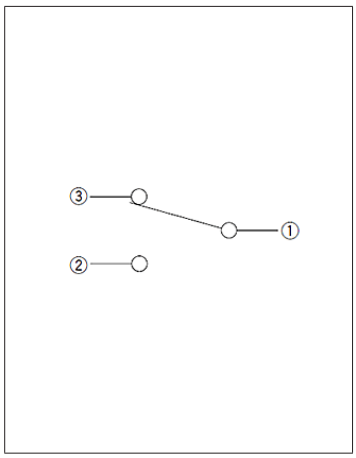

Drawing No.2

■ Dimensions

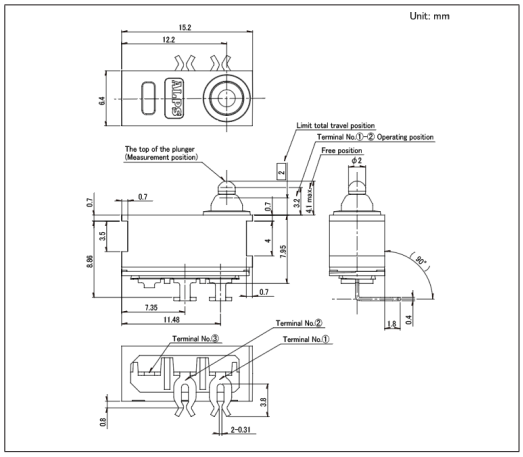

■ Circuit Diagram

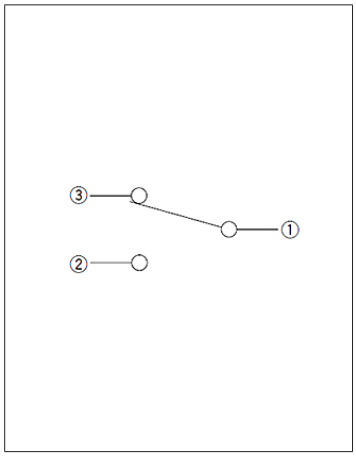

Drawing No.3

■ Dimensions

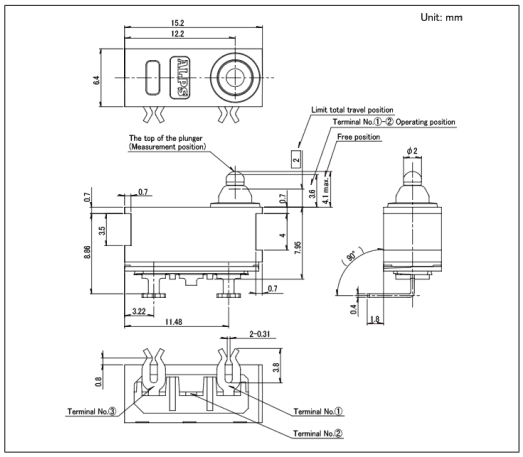

■ Circuit Diagram

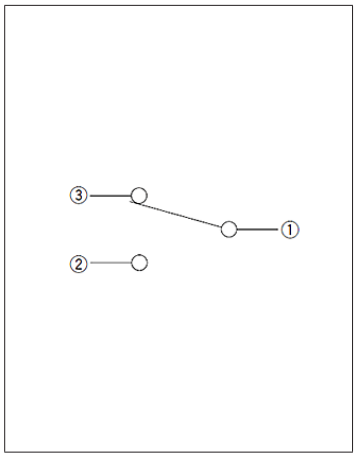

Drawing No.4

■ Dimensions

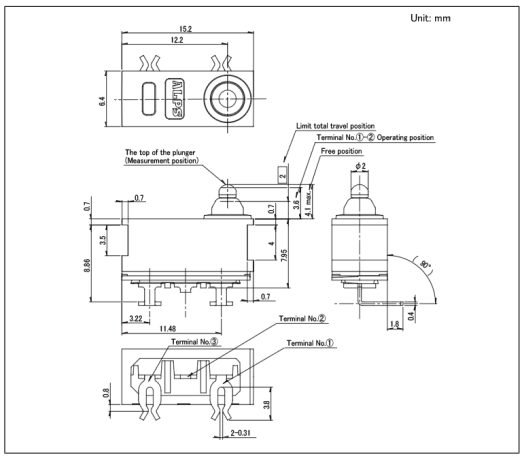

■ Circuit Diagram

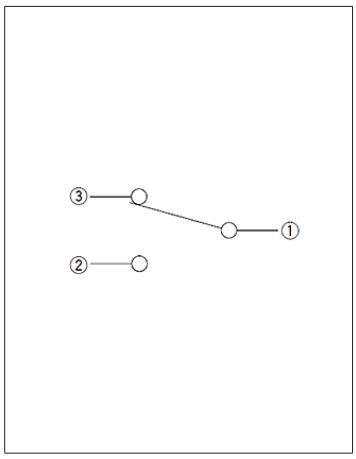

Drawing No.5

■ Dimensions

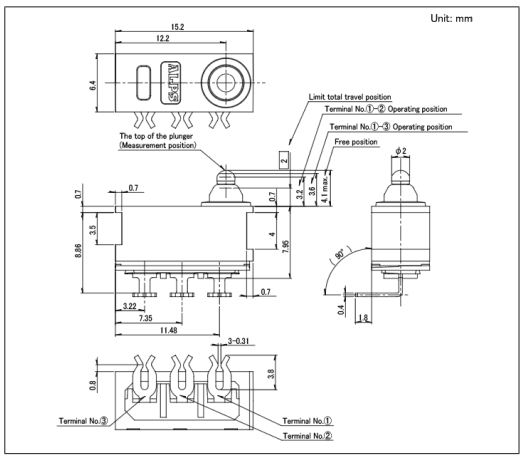

■ Recommended Unit Terminal style

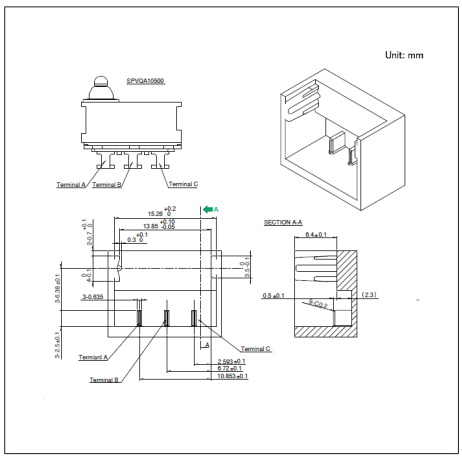

■ Circuit Diagram

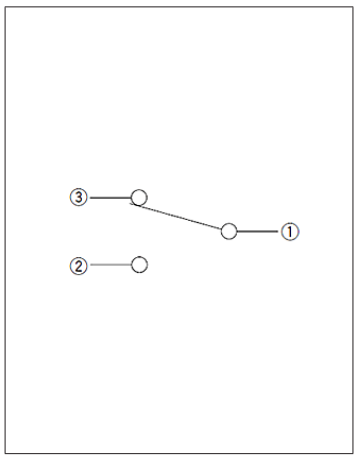

Drawing No.6

■ Dimensions

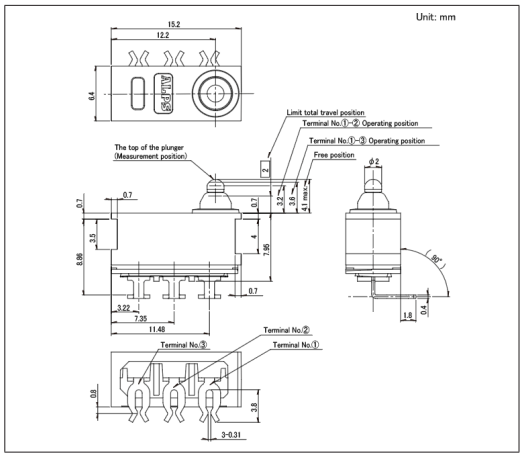

■ Circuit Diagram

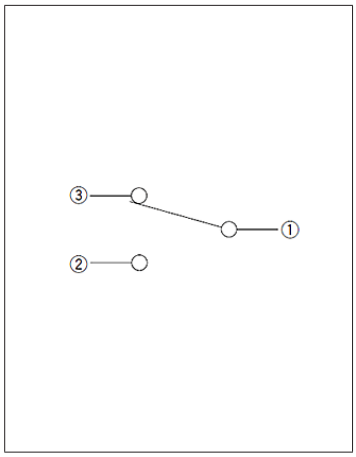

Drawing No.7

■ Dimensions

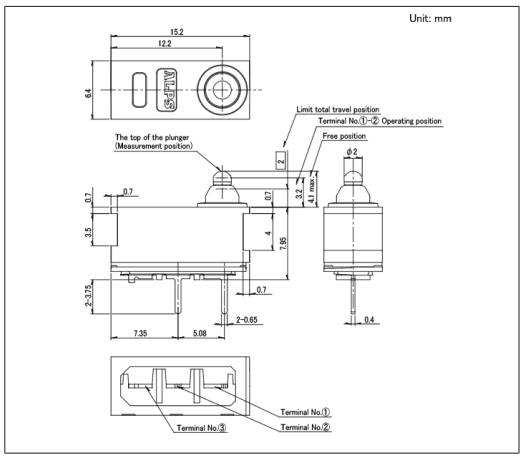

■ Circuit Diagram

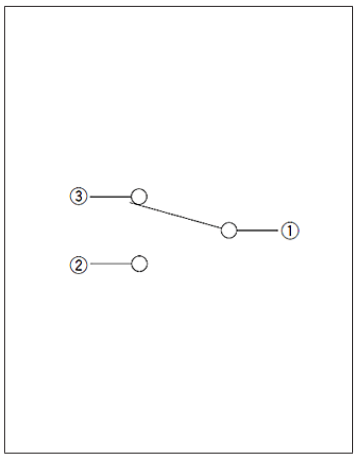

Drawing No.8

■ Dimensions

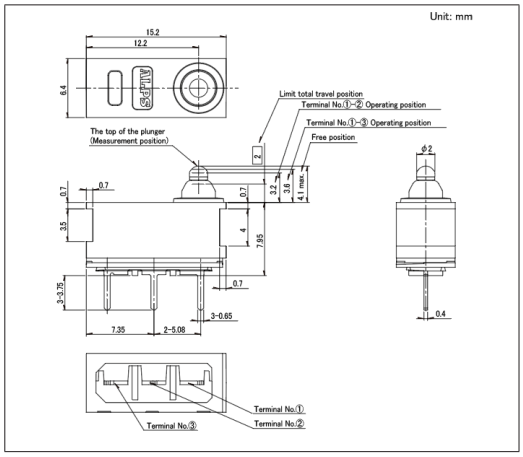

■ Circuit Diagram

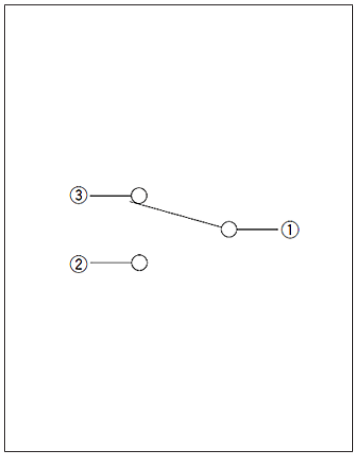

Water-proof Type (Surface Mount)

SPVQC Series

Surface-mount type with a dual-circuit simultaneous switching design ensuring stable contact.

Automotive | Water-proof Type | Dust-proof Type

- Rating(max.)/(min.)(Resistive load):50mA 18V DC/50μA 5V DC
- Contact resistance(Initial/After operating life):75mΩ max./200mΩ max.
- Operating life without load:300,000 cycles
- Operating life with load Rating(max.)(Resistive load):
  300,000 cycles 200mΩ max.

Applications:Automotive:Electric Parking Brake

■ Product List

Products No.	Poles	Positions	Operating force	Changeover timing	Operation part shape	Terminal type	Dimensions (W×D×H) (mm)	Water-proof	Dust-proof	Automotive	Drawing No.
SPVQC10201	2	2	1±0.5N	Non shorting	Push	For PC board (Reflow)	7.4×15.4×7.5	●	●	●	1

⚠Note

1. This catalog shows only outline specifications. When using the products, please obtain formal specifications for supply.
2. This unit cannnot be used in water (IP6K7 rating, except for terminal).
3. Please place purchase orders for taping products per minimum order unit (1 reel or a case).
4. This products can be used in vehicles.
   Although these products are designed to perform over a wide operating temperature range, please ensure that you receive and read the formal delivery specifications before use.

■ Packing Specifications

Taping

Number of packages(pcs.)			Tape width (mm)	Export package measurements (mm)
1 reel	1 case / Japan	1 case / export packing		
300	1,200	2,400	32	403 x 403 x 360

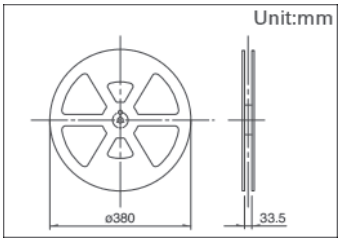

Drawing No.1

■ Dimensions

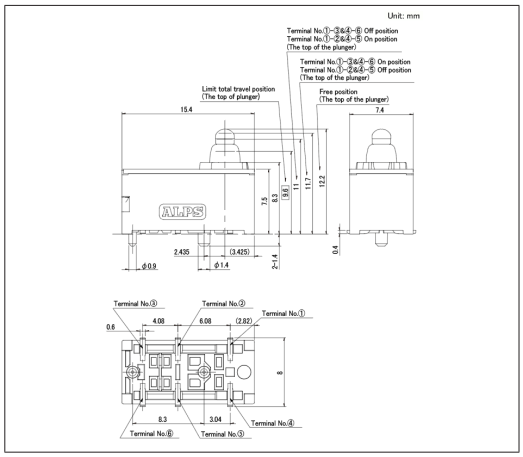

■ Land Dimensions

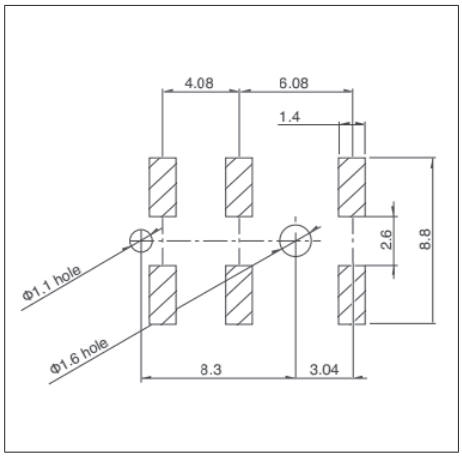

■ Circuit Diagram

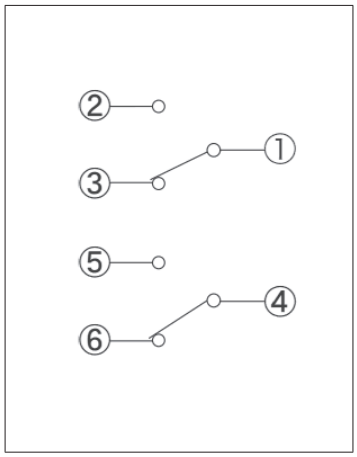

Water-proof Type (Surface Mount)

SPVQF Series

2-circuit synchronous snap action, compact and quiet type

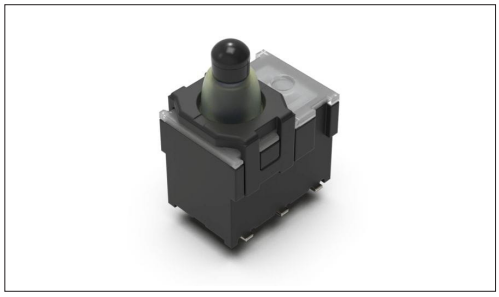

Automotive | Water-proof Type | Dust-proof Type

- Rating(max.)/(min.)(Resistive load):50mA 18V DC/50μA 5V DC
- Contact resistance(Initial/After operating life):75mΩ max./2Ω max.
- Operating life without load:300,000 cycles
- Operating life with load Rating(max.)(Resistive load):
  300,000 cycles 2Ω max.

Applications:Automotive:Electric Parking Brake

■ Product List

Products No.	Poles	Positions	Operating force	Changeover timing	Operation part shape	Terminal type	Dimensions (W×D×H) (mm)	Water-proof	Dust-proof	Automotive	Drawing No.
SPVQF10201	2	2	1.8N max.	Non shorting	Push	For PC board (Reflow)	6.3×8.5×7.0	●	●	●	1

⚠Note

1. This catalog shows only outline specifications. When using the products, please obtain formal specifications for supply.
2. This unit cannnot be used in water (IP6K7 rating, except for terminal).
3. Please place purchase orders for taping products per minimum order unit (1 reel or a case).
4. This products can be used in vehicles.
   Although these products are designed to perform over a wide operating temperature range, please ensure that you receive and read the formal delivery specifications before use.

■ Packing Specifications

Taping

Number of packages(pcs.)			Tape width (mm)	Export package measurements (mm)
1 reel	1 case / Japan	1 case / export packing		
400	800	1,600	24	428 x 413 x 172

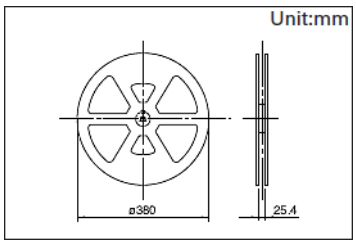

Drawing No.1

■ Dimensions

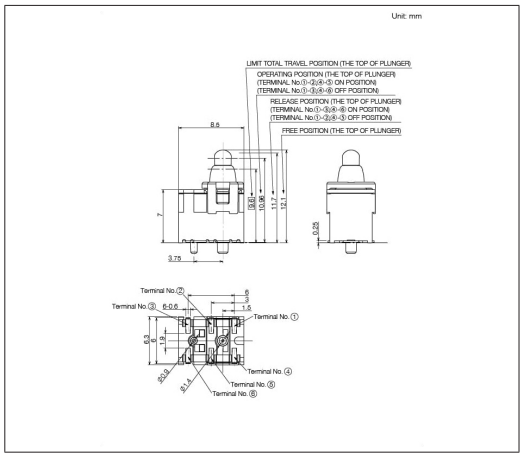

■ Land Dimensions

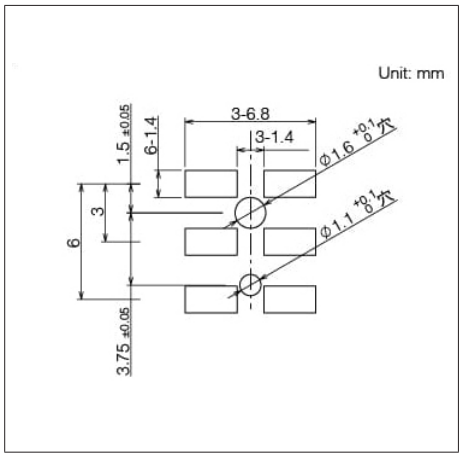

■ Circuit Diagram

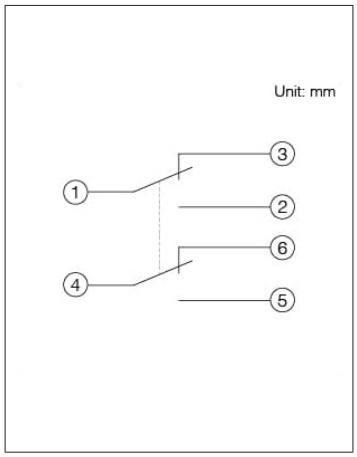

Water-proof Lever Type
SSCN Series

Water-proof lever switch capable of left-right detection with a 40° operating angle per side.

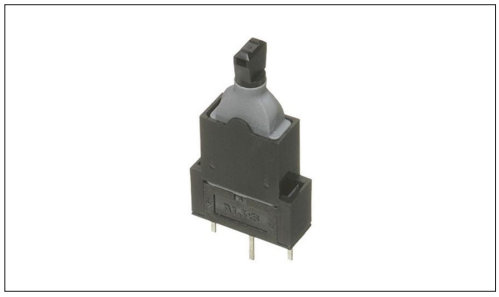

Automotive | Water-proof Type | Dust-proof Type

- Rating(max.)/(min.)(Resistive load):0.1A 12V DC/100μA 5V DC
- Contact resistance(Initial/After operating life):500mΩ max./1Ω max.
- Operating life without load:100,000 cycles
- Operating life with load Rating(max.)(Resistive load):
  100,000 cycles 1Ω max.

Applications:Energy_Industrial:Robots, drones,Industrial equipment
Home:Major home appliances
Automotive:Hood Latch (Side/Rear/Door/Gear)

■ Product List

Products No.	Poles	Positions	Operating force	Changeover timing	Terminal type	Dimensions (W×D×H) (mm)	Water-proof	Dust-proof	Automotive	Drawing No.
SSCN110101	1	2	2N max.	Non shorting	For PC board	5.0×13.0×15.0	●	●	●	1

⚠Note

1. This catalog shows only outline specifications. When using the products, please obtain formal specifications for supply.
2. This unit cannnot be used in water (IP6K7 rating, except for terminal).
3. Please place purchase orders per minimum order unit (integer).
4. This products can be used in vehicles.
   Although these products are designed to perform over a wide operating temperature range, please ensure that you receive and read the formal delivery specifications before use.

■ Packing Specifications

Tray

Number of packages(pcs.)		Export package measurements (mm)
1 case / Japan	1 case / export packing	
600	2,400	540 x 360 x 270

Drawing No.1

■ Dimensions

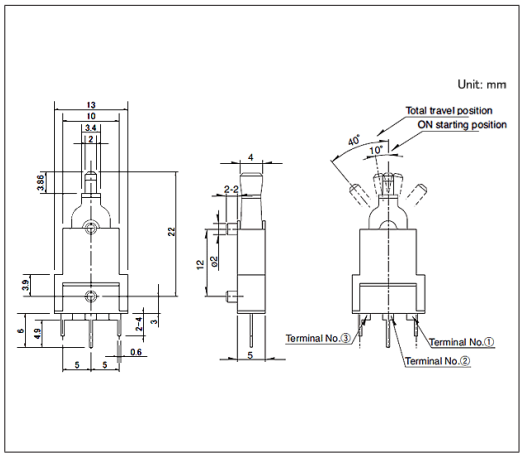

■ Circuit Diagram

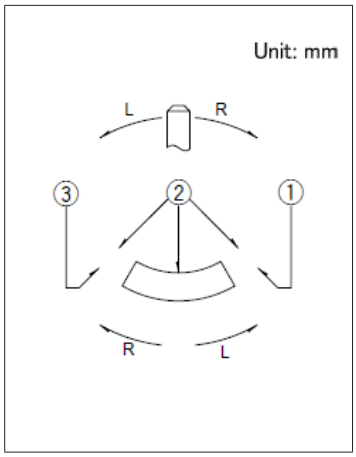

Water-proof Switch Compatible with 10mA to 4.5A

SDDH Series

Compliant with IP6K8 waterproofing standards, enabling submerged operation.

Automotive | Water-proof Type | Dust-proof Type

- Rating(max.)/(min.)(Resistive load):4.5A 12V DC/10mA 12V DC
- Contact resistance(Initial/After operating life):500mΩ max./1Ω max.
- Operating life without load:100,000 cycles
- Operating life with load Rating(max.)(Resistive load):
  100,000 cycles 1Ω max.

Applications:Automotive:Motorcycles

■ Product List

Products No.	Poles	Positions	Operating force	Terminal type	Circuit	Dimensions (W×D×H) (mm)	Water-proof	Dust-proof	Automotive	Drawing No.
SDDHA10100	1	1	4.6N max.	Snap-in Tab Terminal (#187)	SPST (normally closed)	28.5×9.0×24.3	●	●	●	1

⚠Note

1. This catalog shows only outline specifications. When using the products, please obtain formal specifications for supply.
2. Please place purchase orders per minimum order unit (integer).
3. This products can be used in vehicles.
   Although these products are designed to perform over a wide operating temperature range, please ensure that you receive and read the formal delivery specifications before use.

■ Packing Specifications

Tray

Number of packages(pcs.)		Export package measurements (mm)
1 case / Japan	1 case / export packing	
180	360	400 x 270 x 185

Drawing No.1

■ Dimensions

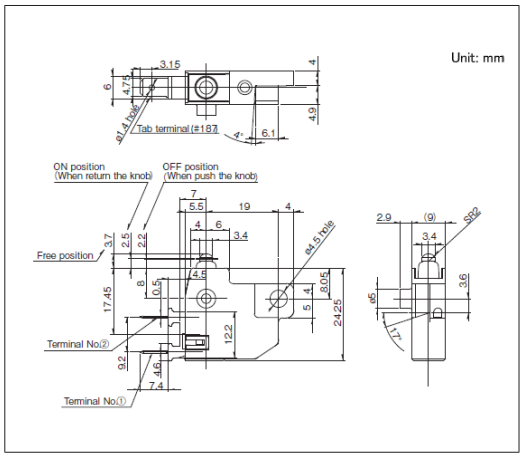

■ Circuit Diagram

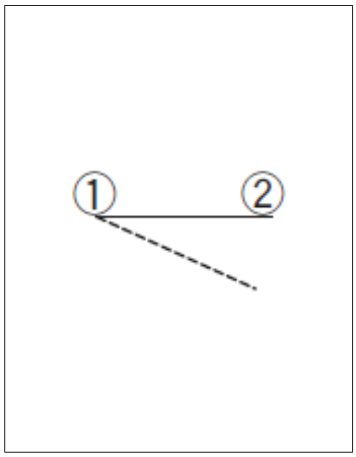

Detector Switches / Soldering Conditions

■Example of Reflow Soldering Condition

1. Heating method: Double heating method with infrared heater.
2. Temperature measurement: Thermocouple ϕ0.1 to 0.2 CA(K)or CC(T)at soldering portion(copper foil surface).
   A heat resisting tape should be used for fixed measurement.
3. Temperature profile

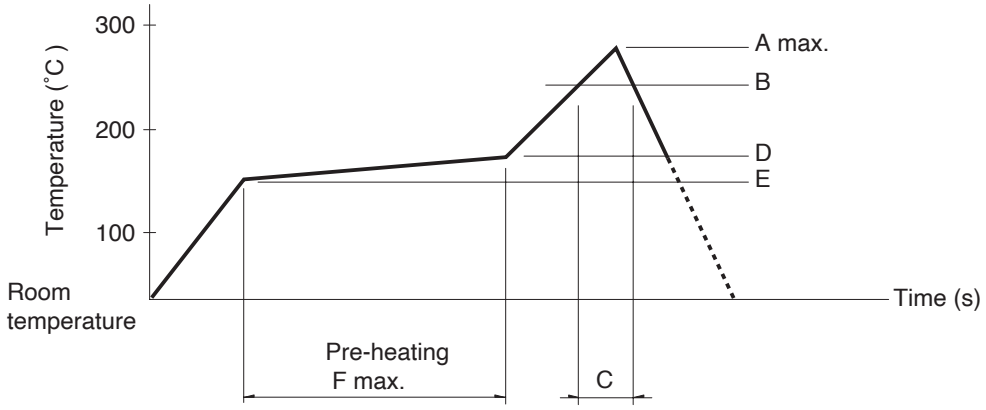

Series(Reflow type)	A (℃) 3s max.	B (℃)	C (s)	D (℃)	E (℃)	F (s)
SPPB	250	230	40	180	150	120
SPVE	260					
SPVL						
SPVM						
SPVN						
SPVR						
SPVS						
SPVT						
SSCM						
SSCQ						
SPVQC	250					
SPVQF						

⚠Note

1. The condition mentioned above is the temperature on the mounting surface of a PC board. There are cases where the PC board's temperature greatly differs from that of the switch, surface depending on the PC board's material, size, thickness, etc.
   The above-stated conditions shall also apply to switch surface temperatures.
2. Soldering conditions differ depending on reflow soldering machines.
   Prior verification of soldering condition is highly recommended.

■Reference for Hand Soldering

Series	Soldering temperature	Soldering time
SPVS, SPVN, SPVT, SPVM, SPVR, SPVE, SSCQ, SSCM, SPVL, SSCT, SPVQC, SPVQF	350±5℃	3s max.
SPVQ3, SPVQ6, SPVQ7, SPVQ8, SPVQ9, SSCN, SPVQA	300±10℃	3+1/0s
SPPB (Reflow)	300±5℃	5s max.
SSCF, SPPB (For Lead, Dip)	350±10℃	3+1/0s

■Reference for Dip Soldering

(For PC board terminal types)

Series	Items		Dip soldering	
	Preheating temperature	Preheating time	Soldering temperature	Duration of immersion
SSCT, SPVQ3, SPVQ6, SPVQ7, SPVQ8, SPVQ9, SPVQA	100±10℃	60s max.	260±5℃	5±1s
SPPW8, SPPB	100 ℃ max.	60s max.	255±5℃	5±1s
SSCF	—		260±5℃	5±1s

Detector Switches / Cautions

1. Appling load to terminals during soldering under certain conditions may cause deformation and electrical property degradation.
2. Avoid use of water-soluble soldering flux, since it may corrode the switches.
3. Check and conform to soldering requirements under actual mass production conditions.
4. No washing.
5. The products are designed and manufactured for direct current resistance. Contact us for use of other resistances such as inductive (L) or capacitive (C).
6. The circuit setting (software setting) shall be ensured for error-free operations, caused by bounce and chattering as specified by each model of the switches.
7. Do not use the switches for a long time near the upper or lower limits of the specified operating temperatures. The use environments shall satisfy the specified range of the environmental tests in the specifications.
8. In case of continuous operation near the upper and lower limits, see requirements of each model to check if possible.
9. The switches designed specifically for automotive uses can be used for vehicles. No other switches shall be used for vehicles.
10. Use the switches sufficiently distant (i.e. at a position closer to the full distance) from the ON Start Position.
11. The switch-returning force cannot be used as a mechanical driving force of a set.
12. Do not apply transverse force to the operating part while piling up PC boards in process and during transportation.
13. Protect small and thin switches from external forces in the set mounting process.
14. Use of a through-hole PC board, or a PC board of different thickness from the recommendation will have a different heat stress. Verify the soldering requirements thoroughly before use.
15. Warped PC boards may change their properties. Carefully design and lay-out the patterns.
16. Use of thinner PC boards will require extra care, since the switches may be floated.
17. Use of the switches in a dusty environment may lead the dusts entering through the openings and cause imperfect contact or malfunction. Take this into account for set design.
18. Corrosive gas if generated by peripheral parts of a set, malfunction such as imperfect contact may occur. Thorough investigation shall be required beforehand.
19. Storage
    Store the products as delivered at normal temperature and humidity, out of direct sunlight and away from corrosive gases. Use them as soon as possible and no later than six months after delivery.
    Once the seal is broken, use them as soon as possible.